NEC

MODEL JC-1404HMA

COLOR MONITOR MultiSync 3D
SERVICE MANUAL

PARTS NO. 599910282

Better Service
Better Reputation
Better Profit

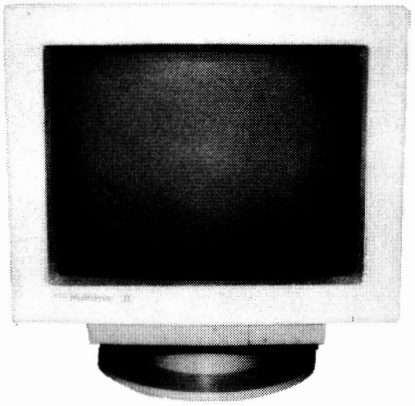

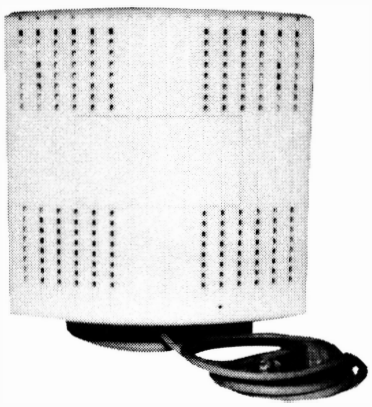

SPECIFICATIONS

A. Electrical Description

Picture Tube	13 Visual inches diagonal 90 degree deflection, 0.28mm dot pitch Dot type black matrix, Not-long persistence phosphor, Dark bulb, Direct etch
Input Signal	Video: TTL Level Positive : ANALOG 0.7 Vp-p/75Ω Positive Sync.: Separate sync. TTL Level Horizontal sync. Positive/Negative Vertical sync. Positive/Negative : Composite sync. TTL Level Positive/Negative : Composite sync. on Green Video sync. 0.3Vp-p Negative (Video 0.7Vp-p Positive)
Display Colors	TTL Input: 8/16/64 colors Analog Input: Unlimited colors
Synchronization	Horizontal: 15.5 kHz to 38 kHz (Automatically) Vertical: 50 Hz to 90 Hz (Automatically)
Resolution	Horizontal: 1024 dots Vertical: 768 lines (interlaced)
Video Band Width	45 MHz
Active Display Area	Horizontal: 240mm (Active display area is changed Vertical: 180mm by signal timing.)
Misconvergence	Less than 0.6mm
Power Supply	AC 120V, 60 Hz
Power Consumption	73W
Environmental Considerations	Operating Temperature 0° to +40°C Humidity 30% to 80% Storage Temperature −20°C to +60°C Humidity 10% to 90%

NOTE: The above specifications are subject to change without notice for further improvement.

NEC Corporation

WARNING

TO PREVENT FIRE OR SHOCK HAZARDS, DO NOT EXPOSE THIS UNIT TO RAIN OR MOISTURE. ALSO DO NOT USE THIS UNIT'S POLARIZED PLUG WITH AN EXTENSION CORD RECEPTACLE OR OTHER OUTLETS, UNLESS THE PRONGS CAN BE FULLY INSERTED.

REFRAIN FROM OPENING THE CABINET AS THERE ARE HIGH-VOLTAGE COMPONENTS INSIDE. REFER SERVICING TO QUALIFIED SERVICE PERSONNEL.

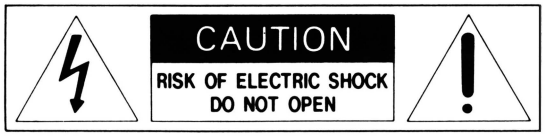

CAUTION: **TO REDUCE THE RISK OF ELECTRIC SHOCK. DO NOT REMOVE COVER(OR BACK). NO USER-SERVICEABLE PARTS INSIDE. REFER SERVICING TO QUALIFIED SERVICE PERSONNEL.**

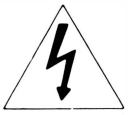

This symbol warns the user that uninsulated voltage within the unit may have sufficient magnitude to cause electric shock. Therefore, it is dangerous to make any kind of contact with any part inside of this unit.

This symbol alerts the user that important literature concerning the operation and maintenance of this unit has been included.

Therefore, it should be read carefully in order to avoid any problems.

B. Mechanical Description (See below diagrams)

1. Cabinet: Molded plastic cabinet with detachable tilt swivel base.

2. Dimensions: 355(W) × 363(H) × 406(D) mm

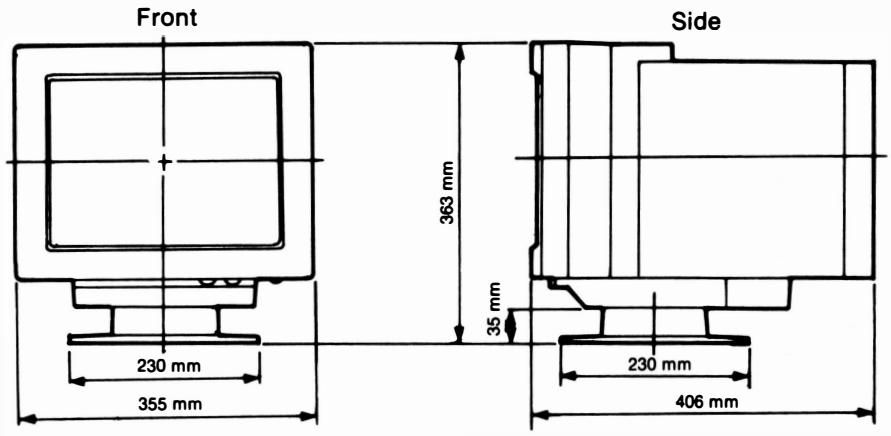

3. Tilt Swivel Range

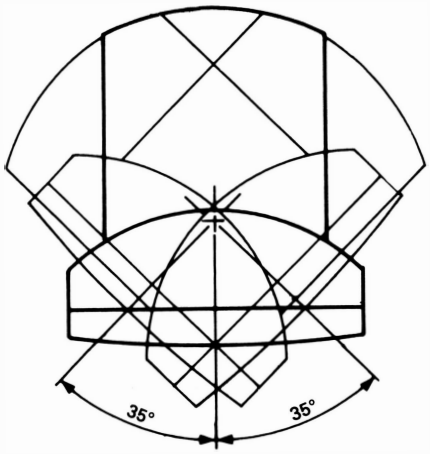

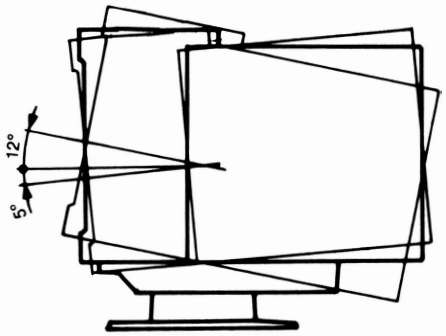

4. Weight: 16 kg

5. Controls:
POWER SWITCH
BRIGHTNESS CONTROL
CONTRAST CONTROL
COLOR SWITCH
MODE SWITCH
H. SIZE CONTROL
H. POSITION CONTROL
V. SIZE CONTROL
V. POSITION CONTROL
MEMORY RECALL BUTTON

6. Input Signal Terminal: 15 PIN MINI D-SUB CONNECTOR (MALE)
(SEE PAGE 6 FOR PIN ASSIGNMENTS)

GENERAL

The MultiSync 3D Color Monitor, an Intelligent Monitor from NEC, is a microprocessor based, digital controlled multiple frequency Color Monitor. The MultiSync 3D Color Monitor automatically adjusts to graphics adapter scanning frequencies between 15.5 kHz and 38 kHz (Horizontal), and between 50 Hz and 90 Hz (Vertical).

As you can see, "design" was the top priority with the MultiSync 3D Color Monitor. Besides the dramatic cabinet design, the MultiSync 3D Color Monitor was designed with microprocessor based intelligence, allowing it to operate at each mode with the precision of a fixed frequency monitor.

The MultiSync 3D Color Monitor gives IBM PC, PC/XT, PC/AT, Personal System/2 (PS/2), Apple Macintosh II and compatible users crisp text and vivid color graphics displays when using the following graphics adapters (the MDA, CGA, EGA, PGC, MCGA, VGA and 8514/A) and Apple Macintosh II Video Card.

The MultiSync 3D Color Monitor can also be used with other "non-standard" graphics adapters to provide users with an extremely wide range of color monitor compatibility.

FEATURES

— The MultiSync 3D Color Monitor is microprocessor controlled with a resident memory base of pre-programmed screen and input configurations and also digital controls.
— The MultiSync 3D Color Monitor automatically scans all horizontal frequencies between 15.5 kHz and 38 kHz, and all vertical frequencies between 50 Hz and 90 Hz.
— The MultiSync 3D Color Monitor is compatible with the IBM PC, PC/XT, PC/AT, PS/2, the Apple Macintosh II and compatibles.
— The MultiSync 3D Color Monitor is compatible with the IBM Monochrome Display Adapter, the IBM Color Graphics Adapter, the IBM Enhanced Graphics Adapter, the IBM Professional Graphics Controller, the IBM MultiColor Graphics Array, the IBM Video Graphics Array, the IBM 8514/A, the Apple Macintosh II Video Card and other compatible graphics adapters.

— The MultiSync 3D Color Monitor's wide compatibility makes it possible to upgrade adapters or software without purchasing a new monitor.
— The MultiSync 3D Color Monitor has a maximum horizontal resolution of 1024 dots and a maximum vertical resolution of 768 lines for superior clarity of display.
— The MultiSync 3D Color Monitor offers both TTL and ANALOG signal inputs, and in the ANALOG mode can display an unlimited palette of colors depending on the graphics adapter and software being used. The MultiSync 3D Color Monitor automatically adjust to either a TTL signalinput or an ANALOG signalinput.
— The MultiSync 3D Color Monitor has a 14″ diagonally measured, non-glare CRT that yields a 13″ viewing area.
— A captive signal cable is included with a 15 Pin mini D-sub connector that is configured for IBM's MCGA, VGA and 8514/A graphics adapters.
— Signal cable adapters for graphics adapters with 9 Pin D-sub connector and Macintosh II Video Card are included.

CAUTIONS

When setting up and using your MultiSync 3D Color Monitor, pay special attention to the following:

— To eliminate eye fatigue, do not use your MultiSync 3D Color Monitor against a bright background or where sunlight or other light sources will shine directly on the monitor.
— Your MultiSync 3D Color Monitor should be placed just below eye level for optimum viewing.
— Allow adequate ventilation around the monitor so that heat from the monitor can properly dissipate.
— Neither the monitor itself, not any other heavy object, should rest on the power cord. Damage to a power cord can cause fire or electrical shock.
— Keep the monitor away from high capacity transformers, electric motors and other strong magnetic fields.
— Your MultiSync 3D Color Monitor should not be used in damp, dusty or dirty areas.
— Handle your MultiSync 3D Color Monitor with care when transporting it.

ADJUSTING THE FRONT CONTROLS

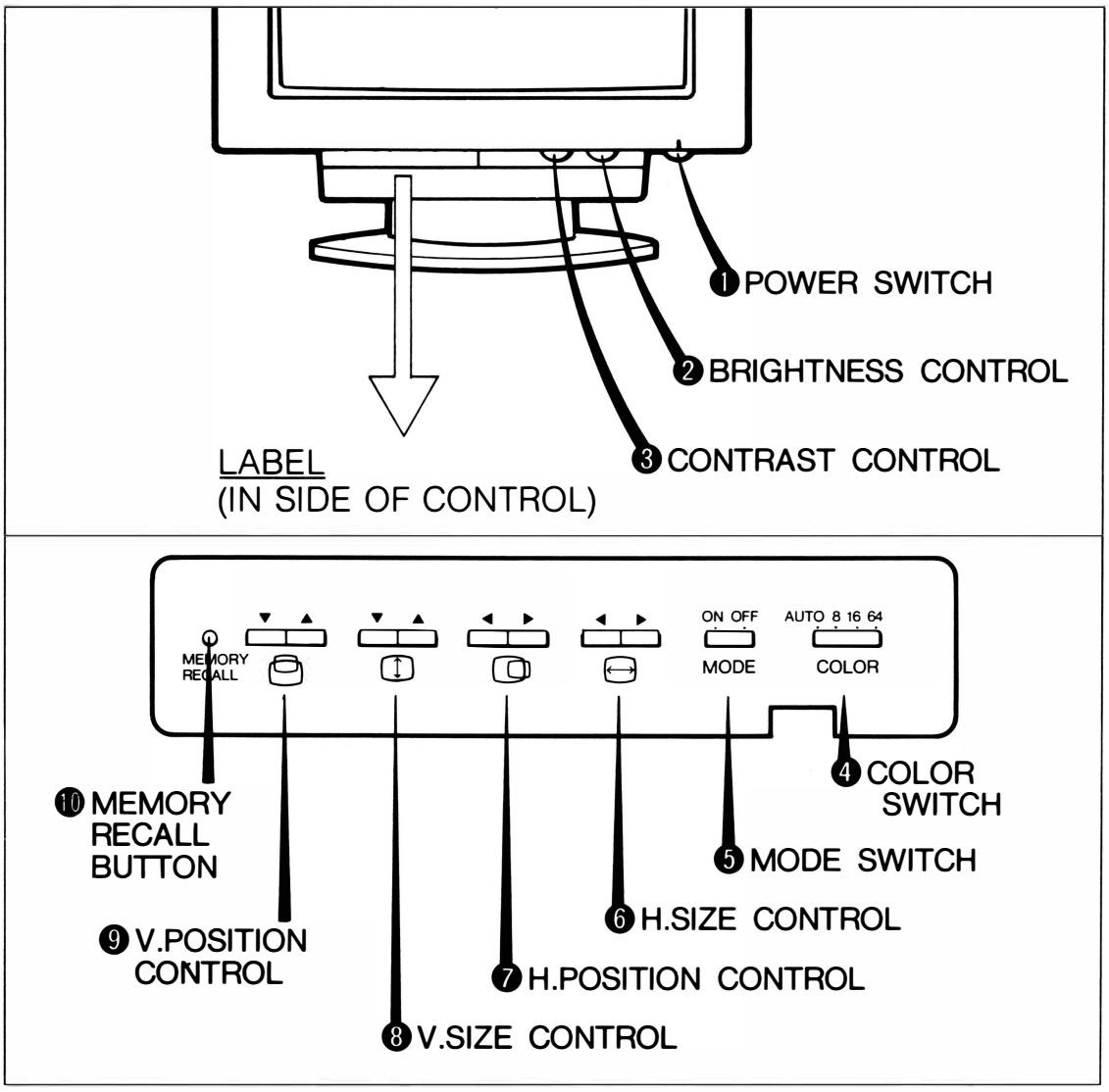

❶ POWER SWITCH

Used to turn the power ON or OFF. When the power is ON, the LED power indicator, located on the front of the monitor, is lit.

❷ BRIGHTNESS CONTROL

Used to adjust the display's brightness preferred by the user.

❸ CONTRAST CONTROL

Used to adjust display's contrast preferred by the user.

❹ COLOR SWITCH

When the monitor receives a TTL color video signal, one of the four color configurations (AUTO, 8, 16, 64) must be selected.

COLOR SWITCH	COLOR MODE
Auto	IBM CGA, EGA or Compatible Graphics adapter
8	8 Colors
16	16 Colors with IBM Brown
64	64 Colors

This switch works with preset TTL modes that the monitor identifies automatically.

❺ MODE SWITCH

This switch selects either the monochrome mode or color mode with a TTL video signal input.
With an Analog video signal input and MODE SWITCH ON, the monitor will give the user an additional user programmable memory area.

MODE SWITCH	Input Video Signal	MODE
OFF	TTL	General Color Mode (CGA, EGA)
	ANALOG	General Analog Mode (VGA, PGC, etc)
ON	TTL	Monochrome Mode (MDA)
	ANALOG	User Programmable Memory Area

For more detail, see the signal identification flowchart.

❻ H. SIZE CONTROL

Adjust these controls for the preferred horizontal size of the display

❼ H. POSITION CONTROL

Adjust these controls for the proper horizontal position of the display.

❽ V. SIZE CONTROL

Adjust these controls for the vertical size of display preferred.

❾ V. POSITION CONTROL

Adjust these controls for the proper vertical position of the display.

A few seconds after the user adjust the size and/or the position, the monitor's CPU will save the new control data into it's memory automatically.

NOTE: The monitor will display the screen configuration that was saved last.

❿ MEMORY RECALL BUTTON

This button resets the data of user changeable memory and recalls the factory preset data.

SIGNAL IDENTIFICATION FLOWCHART

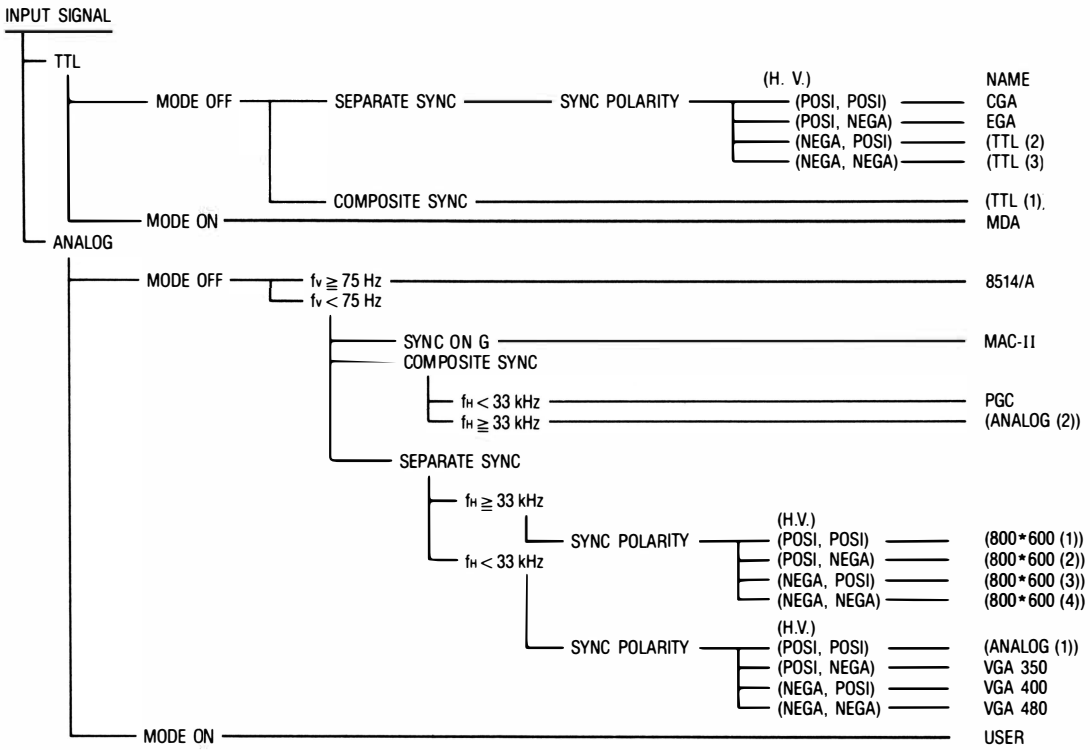

PIN ASSIGNMENTS

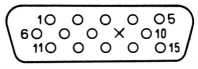

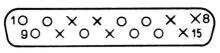

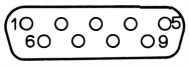

	*15 pin mini D-sub male	**15 pin D-sub male	***9 pin D-sub male			
			IBM MDA	IBM CGA	IBM EGA	IBM PGC
1	RED VIDEO	RED GROUND	GROUND	GROUND	GROUND	RED
2	GREEN VIDEO	RED	NO-CONNECTION	GROUND	SECONDARY RED	GREEN
3	BLUE VIDEO	NO-CONNECTION	NO-CONNECTION	RED	PRIMARY RED	BLUE
4	GROUND	NO-CONNECTION	NO-CONNECTION	GREEN	PRIMARY GREEN	COMPOSITE SYNC
5	GROUND	GREEN WITH SYNC	NO-CONNECTION	BLUE	PRIMARY BLUE	NO-CONNECTION
6	RED GROUND	GREEN GROUND	INTENSITY	INTENSITY	SECONDARY GREEN	RED GROUND
7	GREEN GROUND	NO-CONNECTION	VIDEO	NO-CONNECTION	SECONDARY BLUE	GREEN GROUND
8	BLUE GROUND	NO-CONNECTION	H. SYNC	H. SYNC	H. SYNC	BLUE GROUND
9	NO-CONNECTION	BLUE	V. SYNC	V. SYNC	V. SYNC	GROUND
10	GROUND	NO-CONNECTION				
11	GROUND	GROUND				
12	NO-CONNECTION	NO-CONNECTION				
13	H. SYNC	BLUE GROUND				
14	V. SYNC	GROUND				
15	NO-CONNECTION	NO-CONNECTION				

*15 Pin mini D-sub male connector is on the captive signal cable, for use with the IBM VGA, 8514/A or compatible graphics adapters.
**15 Pin D-sub male connector is on the 15 Pin mini to 15 Pin D-sub adapter, for use with the Apple Macintosh II Video Card.
***9 Pin D-sub male connector is on the 15 Pin mini to 9 Pin D-sub adapter, for use with the IBM MDA, CGA, EGA, PGC or compatible graphics adapters.

TIMING CHARTS

SEPARATE SYNC.

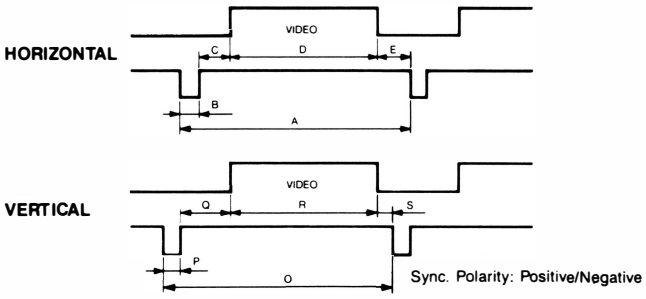

Sync. Polarity: Positive/Negative

COMPOSITE SYNC.

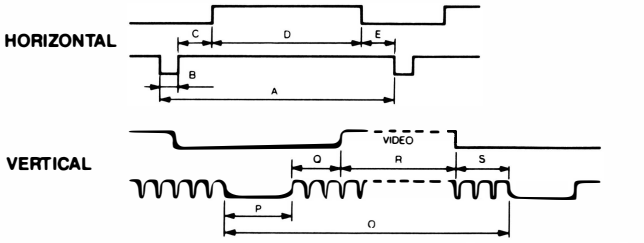

Sync. Polarity: Positive/Negative

COMPOSITE SYNC. & VIDEO (SYNC. ON GREEN)

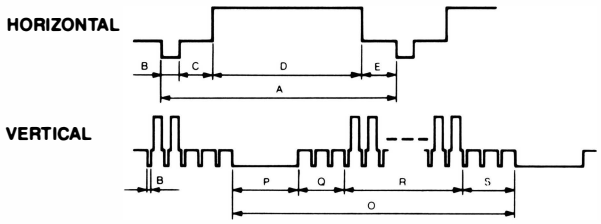

Sync. Polarity: Negative

PRESET TIMING

	MDA Compatible	CGA Compatible	EGA Compatible	PGC Compatible	VGA/MCGA Compatible			8514/A Compatible	Macintosh II Video Card	800 × 600
f_H	18.43 kHz	15.85 kHz	22 kHz	30.48 kHz	31.47kHz			35.52 kHz	35 kHz	35.16 kHz
Aμs	54.3	63	45.5	33	31.78			28.15	28.57	28.44
Bμs	8.3	4.2	4.9	4.5	3.81			3.92	2.1	2
Cμs	1.1	7.2	1.6	2.8	1.91			1.25	3.2	3.56
Dμs	44.3	45	39	25.6	25.42			22.8	21.5	22.22
Eμs	0.6	6.6	0	0.1	0.64			0.18	2.1	0.67
f_V	50 Hz	60.5Hz	60 Hz	60 Hz	70.08Hz		59.95Hz	87 Hz	67 Hz	56 Hz
Oms	20.1	16.52	16.68	16.6	14.27	14.27	16.68	11.5	15	17.78
Pms	0.9	0.19	0.6	0.07	0.06	0.06	0.06	0.113	0.086	0.06
Qms	0.2	2.15	0.08	2.12	1.91	1.11	1.05	0.563	1.12	0.63
Rms	19.0	12.6	16	13.05	11.12	12.71	15.25	10.81	13.7	17.07
Sms	0	1.58	0	1.36	1.18	0.38	0.32	0.014	0.086	0.03
Remarks	TTL Video	TTL Video	TTL Video	Analog Video	Analog Video	Analog Video	Analog Video	Analog Video Interlace	Analog Video	Analog Video

THE METHOD FOR REMOVING THE TILT SWIVEL BASE

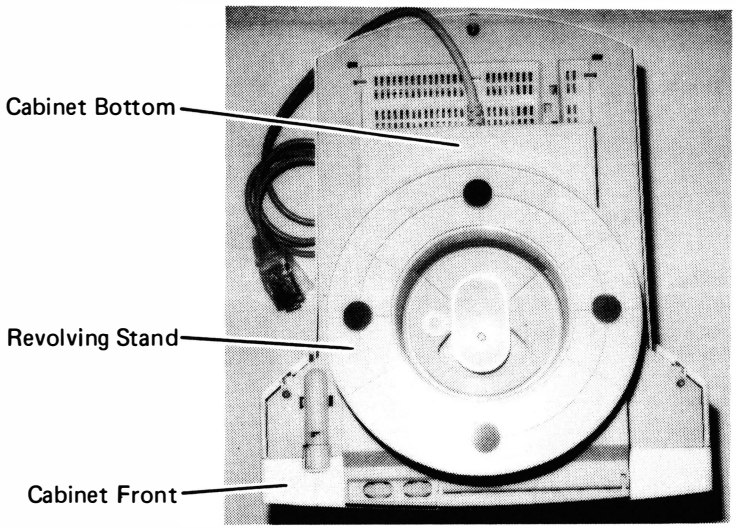

1. Turn the monitor set upside down as shown. (Top VIEW)

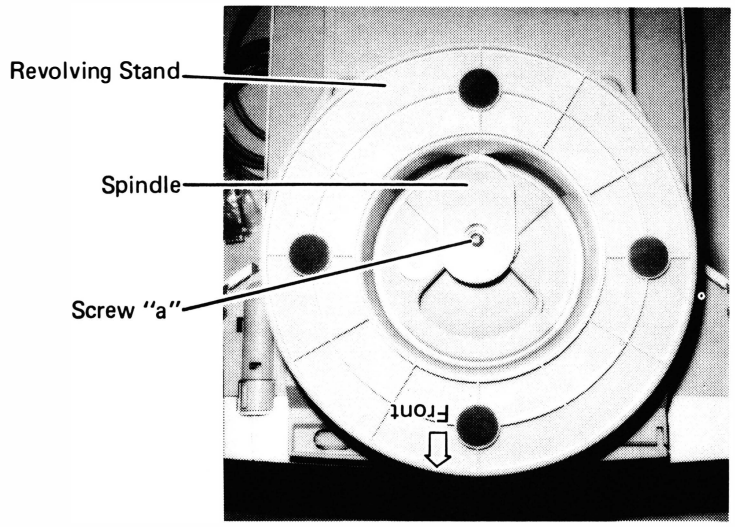

2. Move the revolving stand so that a " ⇧FRONT" mark comes to the cabinet front side.

3. Remove the Screw "a", then remove both spindle and revolving stand from the display.

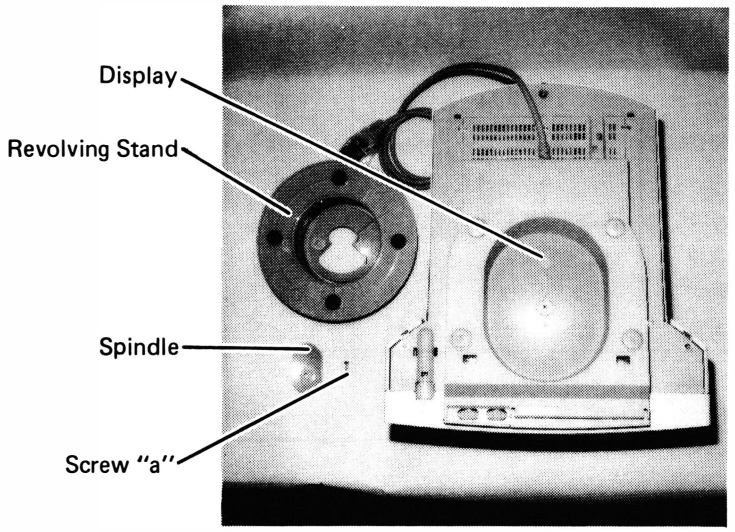

4. The removed parts consist of a display, revolving stand, spindle and screw "a" as shown.

DISASSEMBLY

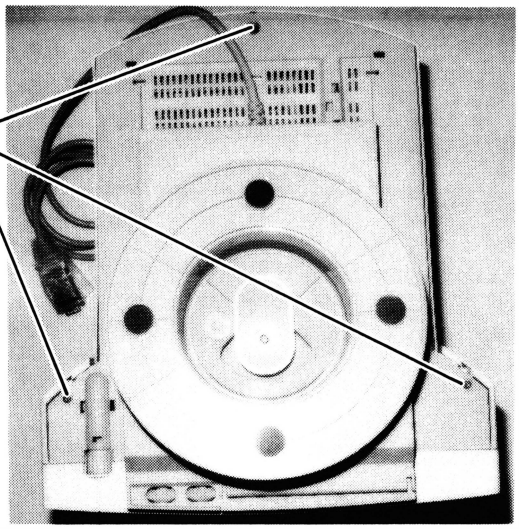

1. Turn the monitor set upside down as shown. (Top VIEW)

2. Remove three screws "a" from the cabinet bottom.

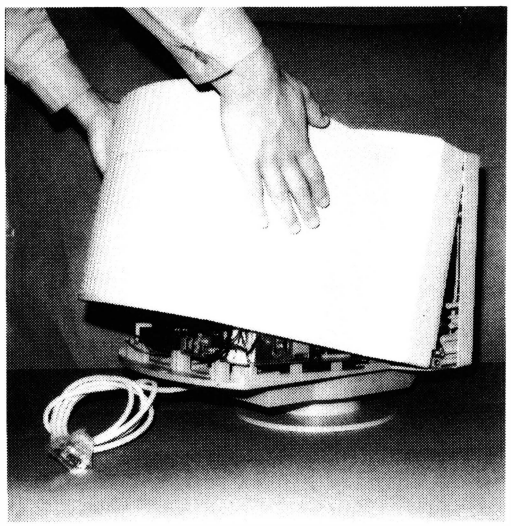

3. Invert the monitor set as normal, then remove the cabinet back.

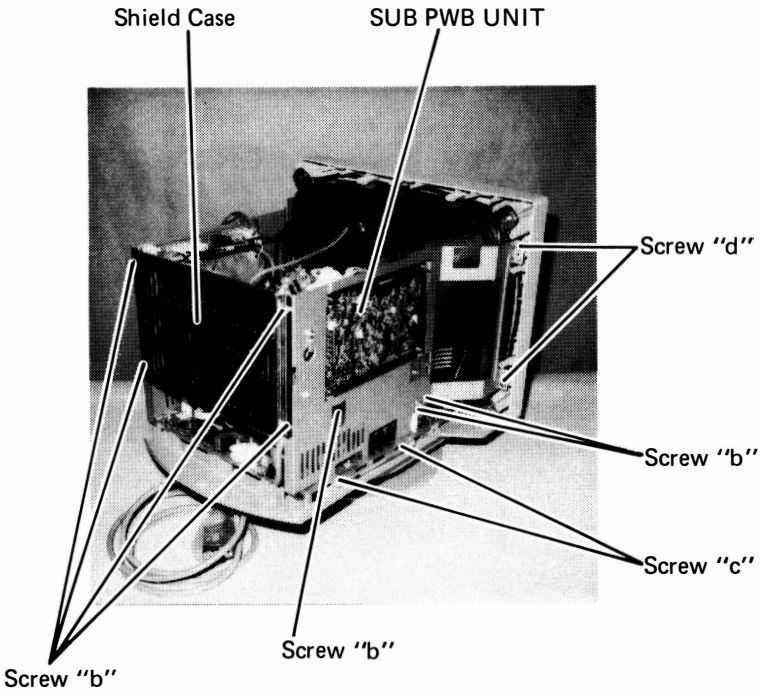

4. Remove the four screws "b" of the shield case and remove the shield case.

5. Remove the two screws "c". Remove the three screws "b" of the SUB PWB UNIT and the screw "b" (under the shield case).
   Remove the two screws "d".

6. Disconnect the connectors "CN-S" and "CN-M" (from SUB PWB ASSY).
   Disconnect the connector "CN-V" (from CRT PWB ASSY) and lift up the SUB PWB UNIT.

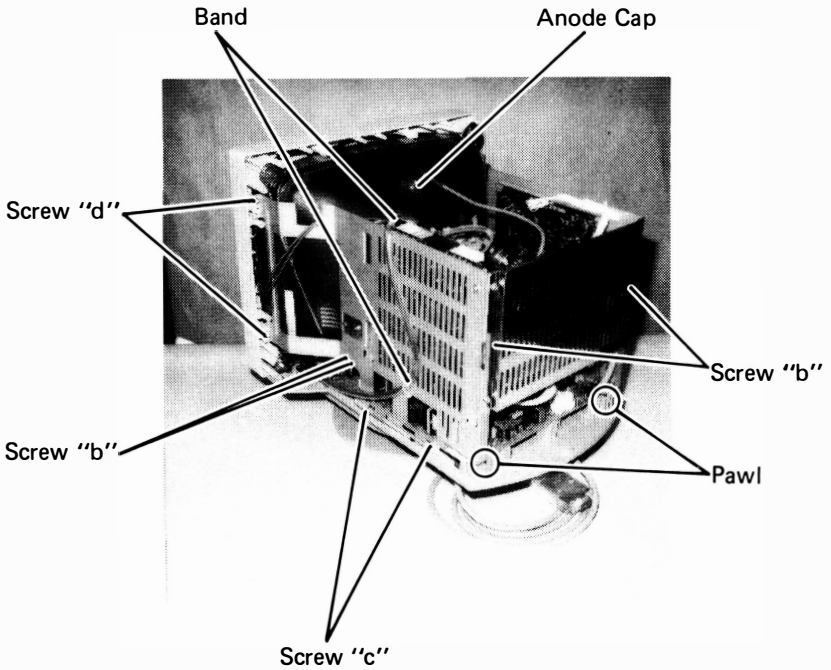

7. Remove the two screws "c". Remove the two screws "d". Remove the two screws "b" of the SW. REG. UNIT and the screw "b" (under the shield case).

8. Disconnect the connector "CN-K" (from MAIN PWB ASSY). Cut the two bands and disconnect the connectors "CN-SW" and "CN-Z" (from SW. REG. UNIT).
   Lift up the SW. REG. UNIT.

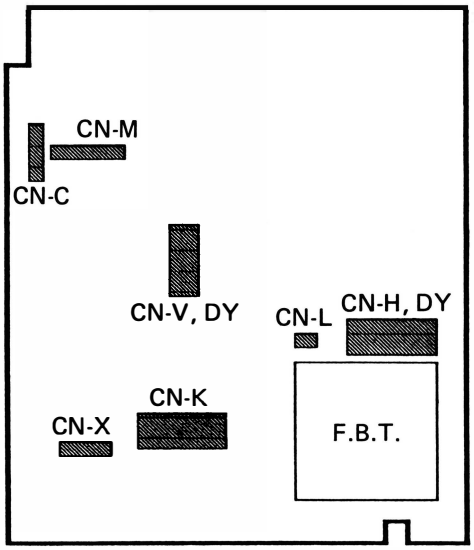

MAIN PWB

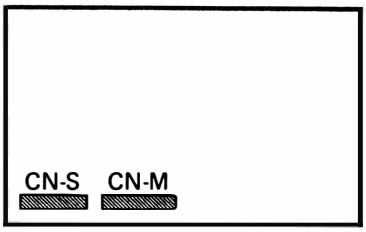

SUB PWB

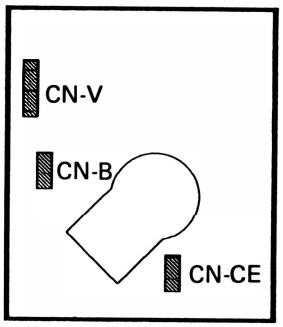

CRT PWB

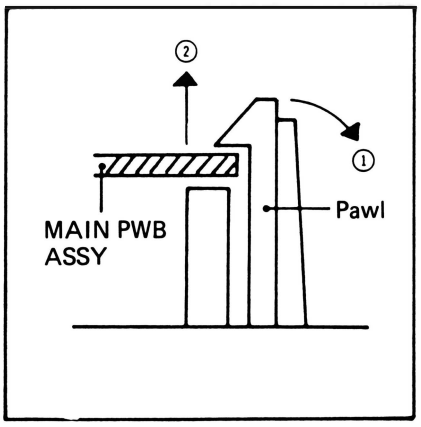

9. Disconnect the connector "CN-B" and "CN-CE" (from CRT PWB ASSY).
   Disconnect the connector "CN-X" (from MAIN PWB ASSY).
   Remove the Anode Cap from CRT.
   Disconnect the CRT PWB ASSY.

   NOTE: When the anode cap is removed, shorting the CRT's anode to ground before touch it.

10. Disconnect the Connectors "CN-H, DY", "CN-V, DY", "CN-C", "CN-M" and "CN-L" (from MAIN PWB ASSY).
    Disengage pawls at two places, then slide and lift up the MAIN PWB ASSY.

SUB PWB UNIT DISASSEMBLY

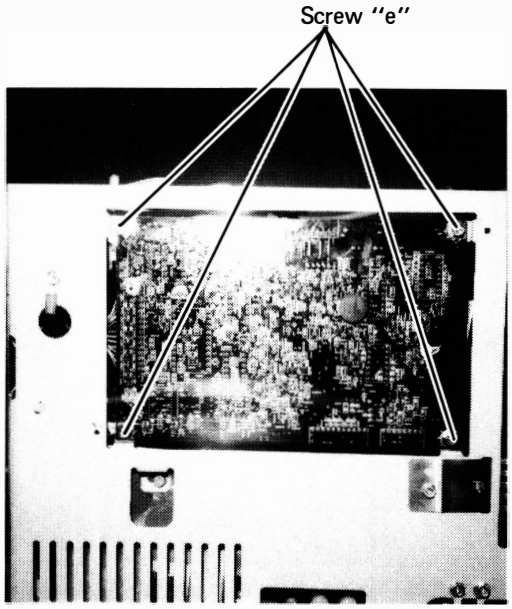

Remove the four screws "e".

Disconnect the connectors "CN-V" and "CN-A" (from SUB PWB UNIT).

Lift up the SUB PWB UNIT.

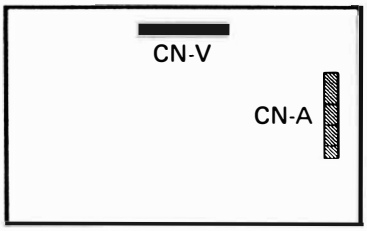

SUB PWB

SW. REG. UNIT DISASSEMBLY

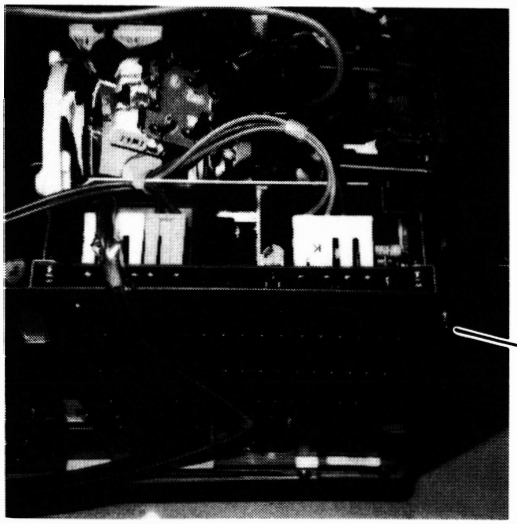

Remove the screw "c".
Remove the SW. REG. UNIT.

PARTS LOCATION DIAGRAMS

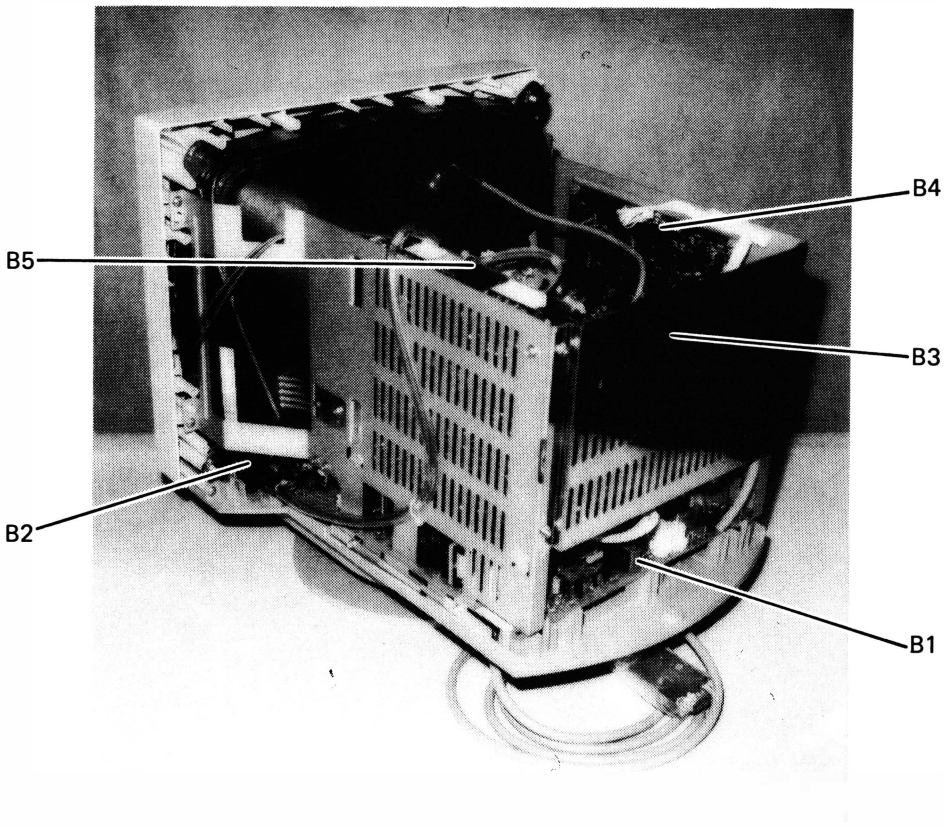

BOARDS

B1	MAIN PWB ASSY	PWE-248A
B2	CONTROL PWB ASSY	PWE-248B
B3	VIDEO/CRT PWB ASSY	PWE-249
B4	SUB PWB UNIT	PWE-250
B5	SW. REG. PWB ASSY	PWE-253

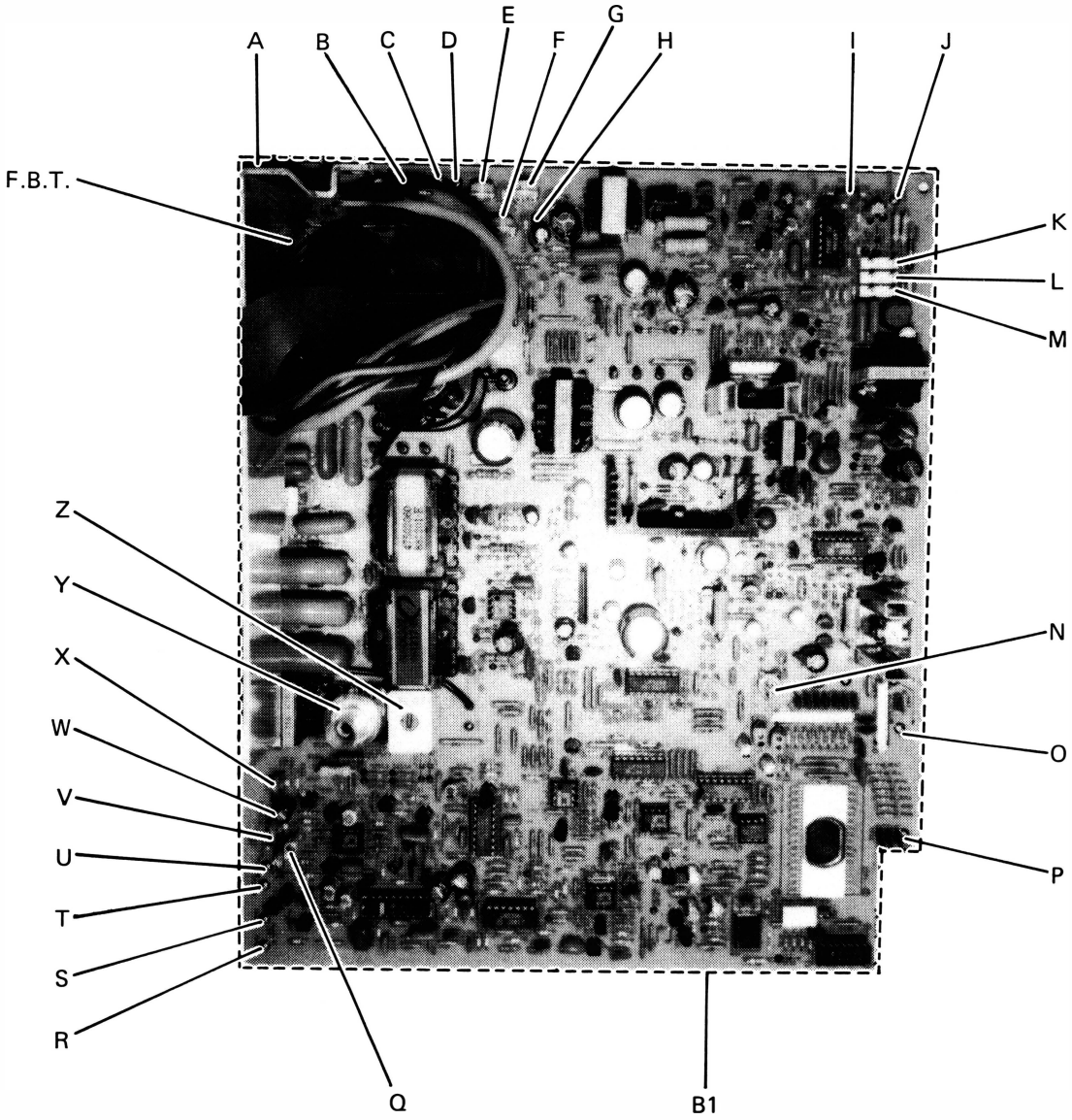

A	TP2001	O	TP151
B	TP2003	P	TP152
C	TP2002	Q	VR501 H. HOLD (1)
D	TP2004	R	TP501
E	VR2002	S	TP401
F	VR2001	T	TP2005
G	VR504 H. V. ADJ	U	TP2006
H	TP551	V	TP502 H. HOLD (2)
I	VR503	W	VR502
J	TP550	X	VR505
K	RH3	Y	L503 H. WIDTH COIL
L	RH2	Z	L504 H. LIN COIL
M	RH1		
N	VR402 SIDE PIN ADJ	B1	MAIN PWB ASSY (PWE-248A)

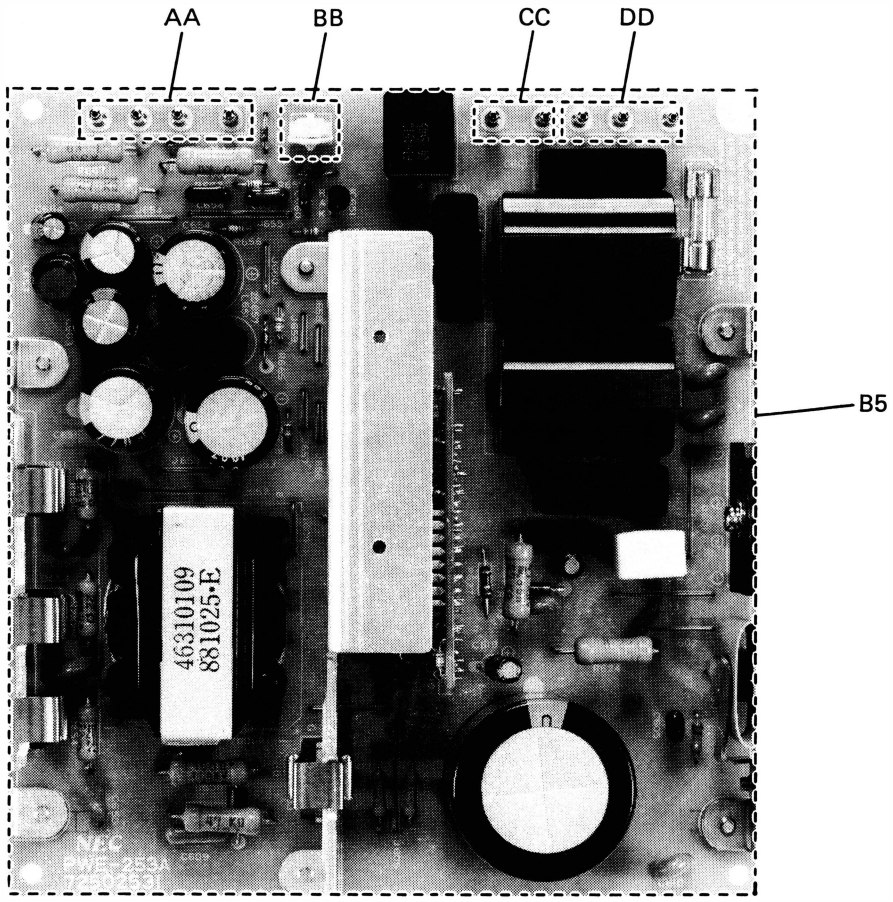

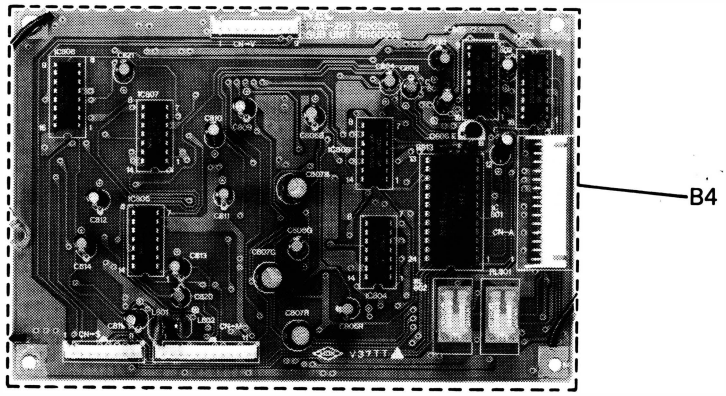

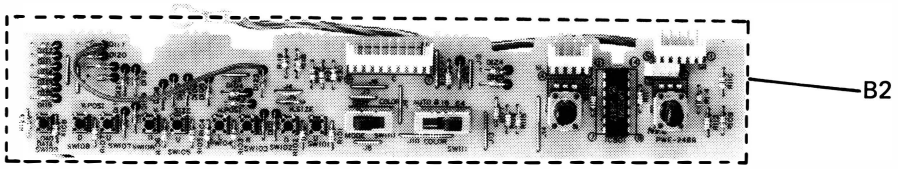

AA	CONNECTOR K	B2	CONTROL PWB ASSY (PWE-248B)
BB	VR651	B4	SUB PWB UNIT (PWE-250)
CC	CONNECTOR Z	B5	SW. REG. PWB ASSY (PWE-253)
DD	CONNECTOR SW		

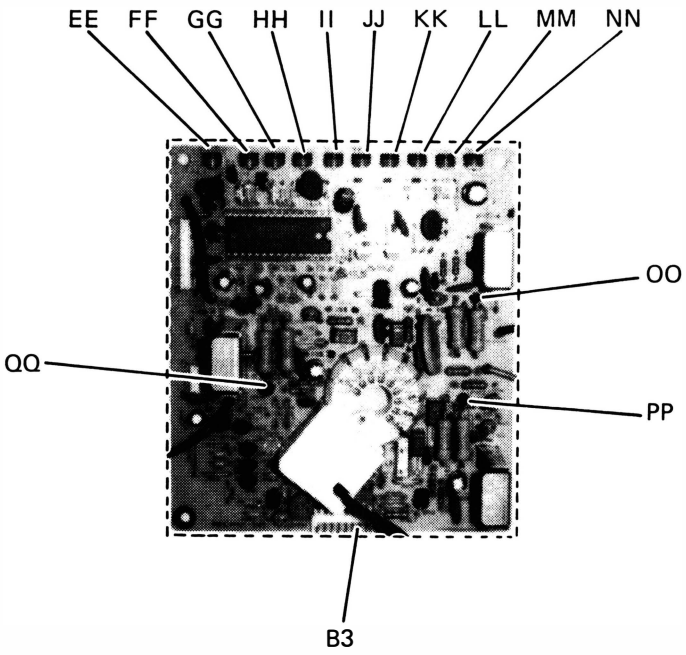

EE	VR904 SUB CONT
FF	VR903 GAIN-B
GG	VR902 GAIN-G
HH	VR901 GAIN-R
II	VR910 BIAS-B
JJ	VR909 BIAS-G
KK	VR908 BIAS-R
LL	VR907 SUB BRIGHT-B
MM	VR906 SUB BRIGHT-G
NN	VR905 SUB BRIGHT-R
OO	TP901
PP	TP902
QQ	TP903
B3	VIDEO CRT PWB ASSY (PWE-249)

ADJUSTMENT PROCEDURE

Standard Adjustment Conditions

1) Power source voltage: AC120V 60 Hz
2) Aging: Adjust after leaving power on for a minimum twenty minutes.
3) Signals:

Video	:	Analog 0.7Vp-p 75Ω terminal positive polarity
		Analog sync. on green
		Video : 0.7Vp-p
		Synchronizing . 0.3Vp-p
Synchronizing	:	TTL level Negative polarity/positive polarity
		Separate/composite
Deflection frequency	:	H. 15kHz~38kHz
		V. 50Hz~90Hz

1. SW. REG. UNIT

+85V LINE
Adjust VR651 to be 85V DC

2. Pre-adjustment of DEF PWB

Apply 23.5V DC between K3 and K4 (GND).

1) +18V adjustment
Adjust VR505 for 18V±0.05V DC between TP502 and the ground.
2) +12V adjustment
Apply a resistance load of 15Ω7W between X4 and X8 (GND).
Adjust VR503 for 12±0.05V DC between TP550 and the ground.
3) High voltage protector setting
High voltage protector 1
With 25.8±0.1V DC applied between TP2001 and the ground, adjust VR2001 for 0.3±0.05V DC between TP2005 and the ground.
High voltage protector 2
With 24.5±0.1V DC applied between TP2003 and the ground, adjust VR2002 for 0.3±0.05V DC between TP2006 and the ground.
Due to DHHS, after adjusting VR2001 and VR2002, seal with an adhesive (TSE-385RTV) and cap (74004891).

3. Main Adjustment

Set the external VRs and switches as follows unless otherwise specified.
Front controls (as seen from front)

VR101 BRIGHTNESS	:	At point where back raster disappears.
VR102 CONTRAST	:	Max. (fully clockwise)
SW110 MODE SWITCH	:	Off (right side)
SW111 COLOR SWITCH	:	Auto (left end)

3-1) DEF PWB Adjustment

A) Analog Adjustment
(1) Horizontal Hold
a) Short TP501 and the ground.
b) Receive signal 1 (15kHz) and adjust horizontal hold (1) VR501 Sor that there is one screen.
c) Receive signal 2 (38kHz) and adjust horizontal hold (2) VR501 So that there is one screen.

d) Receive the signal 1 and confirm that there is nearly one screen. If not, re-perform b) and c).
e) Remove the short between TP501 and the ground.

(2) High Voltage Adjustment
Recieve signal 8 (31.5kHz) and adjust high voltage adjustment VR504 so that the high voltage is 23.5kV with the CRT anode current cut off.
Due to DHHS, after adjusting, seal with an adhesive (TSE-385RTV) or cap (74004891).

(3) Horizontal Raster Centering
Receive signal 8 (31.5kHz) and check that the horizontal linearity is suitable. If it is extremely bad, adjust to a suitable point with L504 (H. LIN. COIL).
Turn the brightness control fully clockwise so that back raster appears, then reinsert connector RH so that the back raster is in the center of the CRT screen.

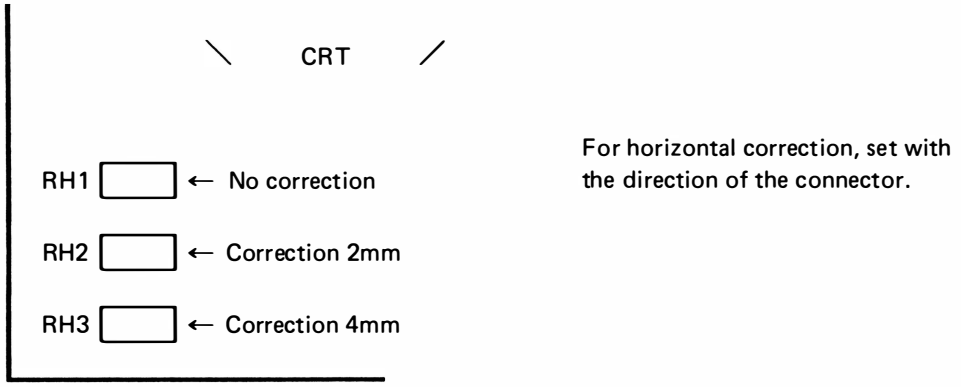

(4) Side Pin Cushion
Receive signal 8 (31.5kHz) and adjust VR403 for the optimum side pin cushion distortion.
Adjust so that pin distortion is zero (straight) at one side or both sides.

(5) Horizontal Linearity
Receive Signal 5 (22.0kHz) and adjust L504 for the optimum horizontal linearity.
(Reference: Optimum is that the magnet is turned about 45° clockwise or counterclockwise.)

(6) Horizontal Width
a) Short TP151 and TP152.
b) Receive signal 8 (31.5kHz) and adjust width coil L503 for a horizontal screen size of 240±2mm.

NOTE: Do not touch the Horizontal Size Control Switch of the front panel until Horizontal Width Coil Adjustment is finished. Because the microcomputer's output voltage for the Horizontal width adjustment will change once the test pins have been shorted.
Adjust after that video area is nearly center of the raster with Horizontal Position Switch and Vertical amplitude is less than over scan (about 18mm) with Vertical Size Switch.
If Horizontal Size Control Switch is pushed by mistake, turn off the power switch and re-adjust.

B) Digital Memory Adjustment
Confirm that the adjustments as shown below are finished before performing this adjustment.

1. High Voltage Adjustment
2. Width Coil Adjustment
3. Horizontal Raster Centering Adjustment
4. Horizontal Hold Adjustment
5. Horizontal Linearity Adjustment
6. Side Pin Adjustment

This adjustment is user control to adjust with the signal 3~12.
This condition is memorized and the signal pattern is reversed cross hatch.

(1) Setting
BRIGHT VR : Max
CONTRAST VR : Min

(2) Procedure of adjustment

1 Short TP151 and TP152.

2 Receive Signal 3 (CGA).
3 Adjust so that the screen is in the center of the back raster with User Control Horizontal Position Switch.
4 Adjust so that the horizontal screen size is 240mm±2mm with User Control Horizontal Size Switch.
5 Adjust so that vertical position of the screen is in the center of CRT with User Control Vertical Position Switch.
6 Adjust so that the vertical screen size is 180mm±2mm with User Control Vertical Size Switch.
7 Push the Memory Recall Switch. (over 5 sec.)

8 Receive Signal 4 (MDA).
9 Turn on the Mode Switch.
10 Perform the shown above 3~7.

11 Turn off the Mode Switch.
12 Receive Signal 5 (EGA).
13 Perform the shown above 3~7.

14 In the same way, perform the shown above 3~7 with signal 6~12.
However, adjust so that the horizontal screen size is 250mm±2mm and the vertical screen size is 187mm±2mm with signal 10 (8514A).

15 Remove the test pin short after confirm that the adjustments with signal 3~12 are finished.
16 Confirm by watching that the screen size position is correct on the all mode.
If not, re-adjust on the mode only and re-confirm on the all mode.

3-2) VIDEO CRT PWB (Adjustment of Video Amplitude and White Balance)

NOTE: Check that the video signals are as shown below before performing the main adjustment. In particular, for LVG-1603, the video signal output level varies according to the signal pattern, so check the level with the signal to be adjusted.

Video : Analog 0.7Vp-p
Synchronizing : H.V Separate TTL level

(1) Initial Setting of Adjustment VRs

VR901~903	GAIN VR	: Fully counterclockwise (MIN)
VR904	SUB CONT. VR	: Fully clockwise (MAX)
VR906, 908, 910	BIAS VR	: Fully clockwise (cathode voltage rising
VR905, 907, 909	SUB BRIGHT VR	: Mechanical Center
SCREEN VR		: Fully counterclockwise (MIN)

(2) Video Contrast Adjustment (Window pattern)
a) GAIN VR adjustment
1 Receive the window pattern (the video area of 1/3~1/2H x 1/2V in which there is no ABL even with contrast at maximum is preferable) (Signal 12)
2 Contrast control : Fully clockwise
Brightness control : Fully counterclockwise
3 Adjust VR901, VR902 and VR903 so that the output voltage is 38Vp-p.
After Adjusting, check the Vp-p again and readjust if they do not confirm to the settings.

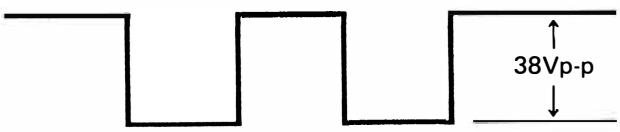

b) SUB CONT. VR adjustment
   1 Contrast control : Fully counterclockwise
     Brightness control : Fully counterclockwise
   2 Adjust VR904 so that TP902 (GREEN OUT) output is 10Vp-p.
     After adjusting, check that TP901 (RED OUT) and TP903 (BLUE OUT) outputs are 10Vp-p ±0.5Vp-p.
     If not, fine-adjust VR904 so that the R, G and B outputs are within the range of 10Vp-p ±0.5Vp-p.

(3) Cut-off Adjustment (All Black Signal)
Contrast control : Fully counterclockwise
Brightness control : Fully counterclockwise
a) 1 Short TP551 and the ground. (chassis)
   2 Short TP401 and the ground. (chassis)
   3 As the screen VR is turned gradually clockwise, a single color will appear as a horizontal line. This color is the reference color for the cut-off adjustment.
b) Turn the bias VRs for the other color than the reference color until bright as the reference color.
c) 1 Remove the short between TP401 and the ground. (chassis)
     Otherwise, replace VR401 original position (voltage of pin 4 IC501 is 6V±0.1V).
   2 Remove the short between TP551 and the ground. (chassis)

NOTE: Perform the cut-off adjustment in as dark a place as possible to make the white tracking which follows better.

(4) SUB BRIGHT VR Adjustment
a) Receive signal 8 (All black signal).
   Contrast control : Fully counterclockwise
   Brightness control : Fully clockwise, so that there is only back raster on the screen.
b) Turn SUB BRIGHT VR for the other color than the reference color of (3) Cut-off Adjustment and adjust so that back raster become to be white.

(5) Fine Adjustment of White Balance
Color temperature: Center X = 0.310
                   Y = 0.325
The color should be white with a slightly blue tinge.
a) Receive signal 8 (VGA 400 lines) H. gray scale (16 gradations).
b) Contrast control : Fully counterclockwise
   Brightness control : Fully clockwise
   Check that the white balance is proper for all gradations.
   If not, fine adjust to make it white with SUB BRIGHT VR for the other color than the reference color.
c) Contrast control : Fully clockwise
   Brightness control : At a point where no back raster appears
   Check that the white balance is proper for all gradations.
   If not, fine adjust to make it white with GAIN VR for the other color than the reference color.

(6) Focus Adjustment
a) Receive signal 12 (all white "%" or 4-dots missing signal)
   Contrast control : Fully clockwise
   Brightness control : At a point where no back raster appears
b) Turn the focus control and adjust for the optimum focus.

(7) Purity Adjustment

a) Be sure that the display is not being exposed to any external magnetic fields.

b) Ensure that the spacing between the Purity, Convergence Magnet, (PCM), assembly and the CRT stem is 29mm ±1mm. (See below diagram)

c) Produce a complete, red pattern on the display. Adjust the Purity magnet rings on the PCM assembly to obtain a complete field of the color red. This is done by moving the two tabs in such a angle between the two tabs, which should be approximately 180°.

d) Check the complete blue and complete green patterns to observe their respective color purity. Make minor adjustment if needed.

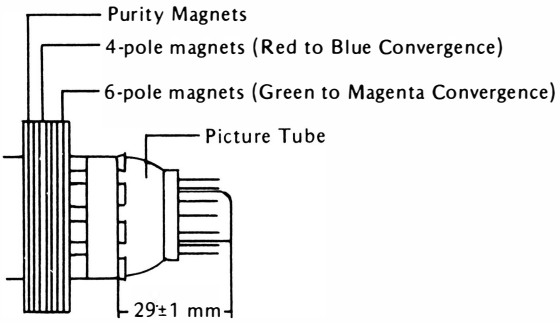

Purity, Convergence Magnet Assembly (PCM)

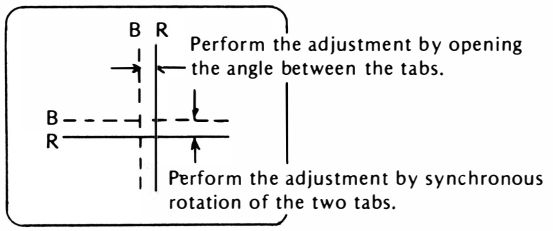

Red to Blue Convergence
(Magenta)

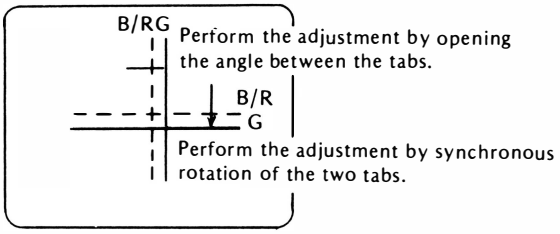

Green to Magenta Convergence
(White)

(8) Convergence Adjustment

a) Produce a magenta crosshatch on the display.

b) Adjust the focus for the best overall focus on the display.
Also adjust the brightness to the desired condition.

c) Vertical red and blue lines are converged by varying the angle between the two tabs of the 4-pole magnets on the PCM assembly. (See above diagrams)

d) Horizontal red and blue lines are converged by varying the two tabs together, keeping the angle between them constant.

e) Produce a white crosshatch pattern on the display.

f) Vertical green and magenta lines are converged by varying the angle between the two tabs of the 6-pole magnets.

g) Horizontal green and magenta lines are converged by varying the two tabs together, keeping the angle between them constant.

TIMING OF REFERENCE SIGNALS

SIGNALS FOR USING LVG-1603

	Abbreviation	Unit	1	2	3	4	5	6	7	8	9	10	11	12
			15kHz	38kHz	CGA	MDA	EGA	PGC	VGA 350	VGA 400	VGA 480	8514A	MAC II	800 x 600
HORIZONTAL	Total	DOT	896	1024	896	882	744	824	900	900	900	1264	864	1024
	Rate	KHz	15.0000	38.0000	15.8500	18.4300	22.0000	30.4800	31.4700	31.4700	31.4700	35.5200	35.0000	35.1600
	Dots/Character	DOT	8	8	8	9	8	8	9	9	9	8	8	8
	Characters	CHR	80	100	80	80	80	80	80	80	80	128	80	100
	Drive Delay	DOT	736	824	736	729	640	640	738	738	738	1032	656	824
	Drive Width	DOT	56	72	56	135	80	48	108	108	108	176	64	72
VERTICAL	Total	RASTER	250	626	260	370	366	508	449	449	525	409	525	626
	Rate	Hz	60.0000	60.7000	60.9600	49.8100	60.1100	60.0000	70.0900	70.0900	59.9400	43.4800	66.6700	56.2400
	Lines/Character	RASTER	10	15	10	14	10	10	14	16	16	8	16	15
	Rows	RASTER	200	600	200	350	350	480	350	400	480	384	480	600
	Drive Delay	RASTER	228	601	225	350	351	481	387	412	490	384	483	601
	Drive Width	RASTER	2	2	3	15	13	2	2	2	2	4	3	2
Dot Rate		MHz	13.4400	38.9120	14.2016	16.2553	16.3680	25.1155	28.3230	28.3230	28.3230	44.8973	30.2400	36.0038
Scan Mode			0											
Character Font			0											
Character Code			48											
Patten Key Code			–											
Video Output			–											
Add Sync/Inverse			0000	0000	0000	0000	0000	0000	0000	0000	0000	0000	0100	0000
Dot Duty/Set			00	00	00	00	00	01	00	00	00	00	00	00
Polarity			11	11	11	10	10	11	10	01	00	11	00	11

DATA FORMAT FOR USING Quantum 801C

TIMING PARAMETERS:

Real Time Parameters

Dot Rate	MHz
Horizontal Rate	KHz
Vertical Rate	Hz

Non-Real Time Parameters

Horizontal	Vertical
Dots/Character	Lines/Character
Total Characters	Total Rows
Drive Delay	Drive Delay
Drive Width	Drive Width
	Step Width

OPTION PARAMETERS

Signal Gating

Composit Sync.	OP 1.–0=off 1=on
Vertical Step	OP 2.–0=off 1=on
Horizontal Drive	OP 3.–0=off 1=on
Vertical Drive	OP 4.–0=off 1=on

Signal Polarity

Composite Sync.	OP 5.–0=non-inverted 1=inverted
Vertical Step	OP 6.–0=non-inverted 1=inverted
Horizontal Drive	OP 7.–0=non-inverted 1=inverted
Vertical Drive	OP 8.–0=non-inverted 1=inverted
Video	OP 13.–0=non-inverted/positive 1=inverted/positive 2=non-inverted/negative 3=inverted/negative

Interlace Mode	OP 9.–0=non-interlace 1=interlaced sync only 3=interlaced sync & video
Video Mode	OP 10.–0=monochrome 1=color
Duty Cycle	OP 11.–0=50% 1=100% (OP 12.0) 0 or 1=100% (OP 12.2)
Character Clocking Mode	OP 12.–0=single-phase 2=dual-phase
Horizontal Skew	OP 14.–skew right 0-3 dots
Vertical Skew	OP 15.–skew down 0-9 lines
Cursor	OP 16.–0=off 1=fast blink 2=slow blink 3=on continuous

SIGNALS for using QUANTUM 801C

	1	2	3	4	5	6	7	8	9	10	11	12
Real Time Parameters		*								*		*
Dot Rate (MHz)	13.440	29.184	14.202	16.255	16.368	25.116	28.324	28.324	28.324	22.449	30.246	27.003
Horizontal Rate (kHz)	15.000	38.000	15.850	18.430	22.000	30.480	31.470	31.470	31.470	35.520	35.000	35.160
Vertical Rate (Hz)	60.000	60.700	60.960	49.810	60.110	60.000	70.000	70.000	59.943	86.960	66.667	56.000
Non-Real Time Parmeters												
H: Dots/Character	8	6	8	9	8	8	9	9	9	8	8	6
Total	112	128	112	98	93	103	100	100	100	79	108	128
Characters	80	100	80	80	80	80	80	80	80	64	80	100
Drive Delay	92	103	92	81	80	80	82	82	82	64	88	103
Drive Width	7	9	7	15	10	6	12	12	12	11	8	9
V: Lines/Character	10	15	10	14	10	10	14	16	16	16	16	15
Total	250	626	326	370	366	508	449	449	525	409	525	626
Rows	20	40	20	25	35	48	25	25	30	24	48	40
Drive Delay	22	40	22	25	35	48	28	26	31	24	48	40
Drive Width	2	2	3	15	13	2	2	2	2	4	3	2
Step Width	–	–	–	–	–	–	–	–	–	–	–	–
Signal Gating												
Composite Sync	0	0	0	0	0	1	0	0	0	0	1	0
Vertical Step	0	0	0	0	0	0	0	0	0	0	0	0
Horizontal Drive	1	1	1	1	1	0	1	1	1	1	0	1
Vertical Drive	1	1	1	1	1	0	1	1	1	1	0	1
Signal Polarity												
Composite Sync	0 P					0 P					1 N	
Vertical Step	–											
Horizontal Drive	0 P	0 P	0 P	0 P	0 P	–	0 P	1 N	1 N	0 P	1 N	0 P
Vertical Drive	0 P	0 P	0 P	1 N	1 N	–	1 N	0 P	1 N	0 P	1 N	0 P
Video	0											
Interlace Mode	0											
Video Mode	1											
Duty Cycle	0											
Character Clocking Mode	0											
Horizontal Skew	–											
Vertical Skew	–											
Cursor	–											
	15kHz	38kHz	CGA	MDA	EGA	PGC	VGA 350	VGA 400	VGA 480	8514A	MacII	800 x 600

NOTE: "*" marked signals put down the dot rate. Because, the dot rate may not exceed 32.76 MHz while in the color mode (0 P 10.1) or the signal-phase character clocking mode (0 P 12.0)

TROUBLE SHOOTING

Before using this chart, please refer to the trouble shooting in the user's manual.

TABLE OF CONTENTS

1. NO RASTER

2. SWITCHING REGULATOR UNIT OUTPUT ERROR

   (2-1) SWITCHING REGULATOR UNIT FAILURE
   (2-2) MAIN PWB +B line FAILURE
      (2-2-1) + 24V line FAILURE
      (2-2-2) + 85V line FAILURE
      (2-2-3) +170V line FAILURE

3. LACK OF SYNCHRONIZATION

   (3-1) HORIZONTAL
   (3-2) VERTICAL

4. DIGITAL CONTROL ERROR

   (4-1) DIGITAL CONTROL ERROR
   (4-2) USER CONTROL ERROR
   (4-3) MEMORY ACCESS ERROR

5. ABNORMAL PICTURE

   (5-1) ABNORMAL HORIZONTAL WIDTH
   (5-2) ABNORMAL VERTICAL SIZE
   (5-3) ABNORMAL HORIZONTAL POSITION
   (5-4) ABNORMAL VERTICAL POSITION
   (5-5) ABNORMAL VERTICAL SCAN
   (5-6) ABNORMAL VIDEO
   (5-7) SIDE PIN CUSHION DISTORTION FAILURE
   (5-8) POOR FOCUS
   (5-9) IMPURITY ON CRT SCREEN

1. NO RASTER

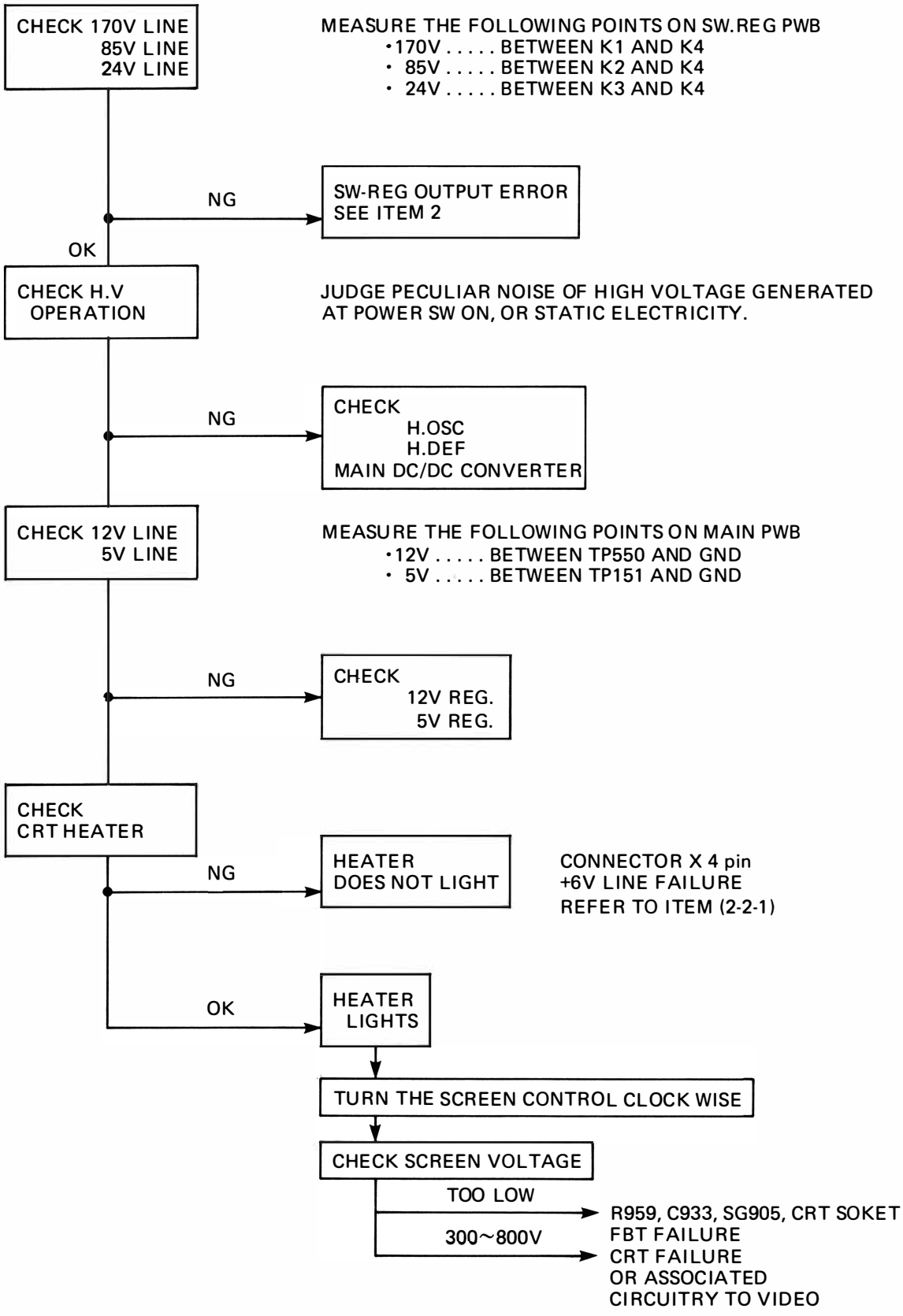
CHECK 170V LINE
85V LINE
24V LINE
MEASURE THE FOLLOWING POINTS ON SW.REG PWB
•170V . . . . . BETWEEN K1 AND K4
• 85V . . . . . BETWEEN K2 AND K4
• 24V . . . . . BETWEEN K3 AND K4
NG
SW-REG OUTPUT ERROR
SEE ITEM 2
OK
CHECK H.V
OPERATION
JUDGE PECULIAR NOISE OF HIGH VOLTAGE GENERATED
AT POWER SW ON, OR STATIC ELECTRICITY.
NG
CHECK
H.OSC
H.DEF
MAIN DC/DC CONVERTER
CHECK 12V LINE
5V LINE
MEASURE THE FOLLOWING POINTS ON MAIN PWB
•12V . . . . . BETWEEN TP550 AND GND
• 5V . . . . . BETWEEN TP151 AND GND
NG
CHECK
12V REG.
5V REG.
CHECK
CRT HEATER
NG
HEATER
DOES NOT LIGHT
CONNECTOR X 4 pin
+6V LINE FAILURE
REFER TO ITEM (2-2-1)
OK
HEATER
LIGHTS
TURN THE SCREEN CONTROL CLOCK WISE
CHECK SCREEN VOLTAGE
TOO LOW
R959, C933, SG905, CRT SOKET
FBT FAILURE
300~800V
CRT FAILURE
OR ASSOCIATED
CIRCUITRY TO VIDEO

2. SWITCHING REGULATOR UNIT OUTPUT ERROR

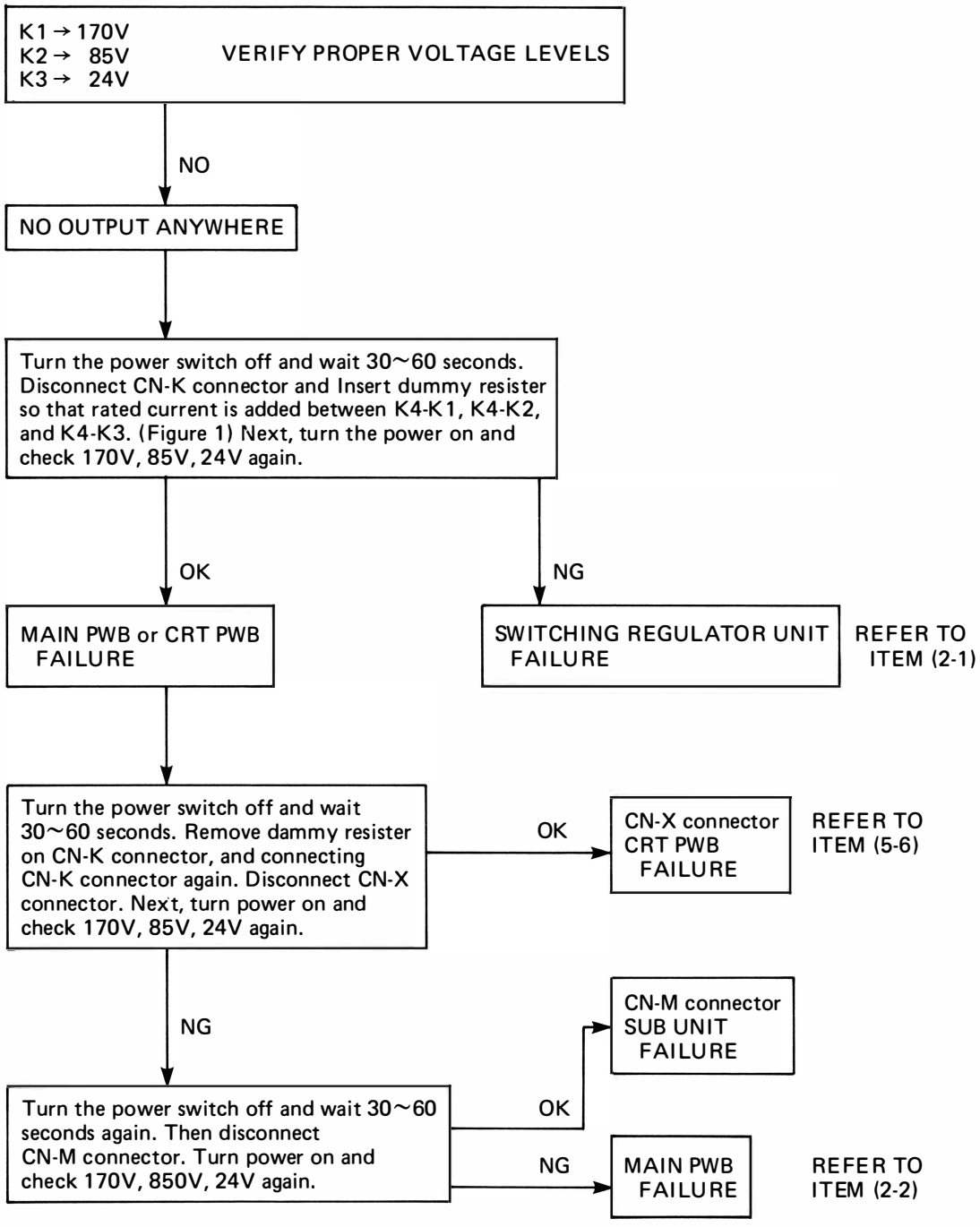

(Fig. 2-1-1) Rated load current at K1, K2, K3

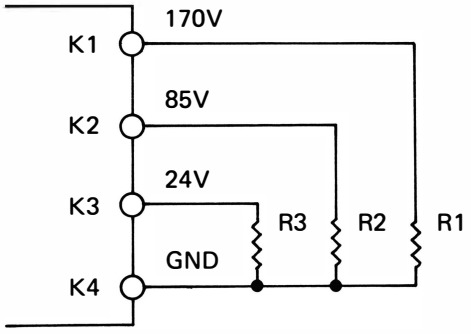

170V	65~290mA (2.6kΩ~586.2Ω)
85V	35~230mA (2.4kΩ~369.5Ω)
24V	0.5~1.0A (48~24Ω)

(2-1) THE SWITCHING REGULATOR UNIT FAILURE

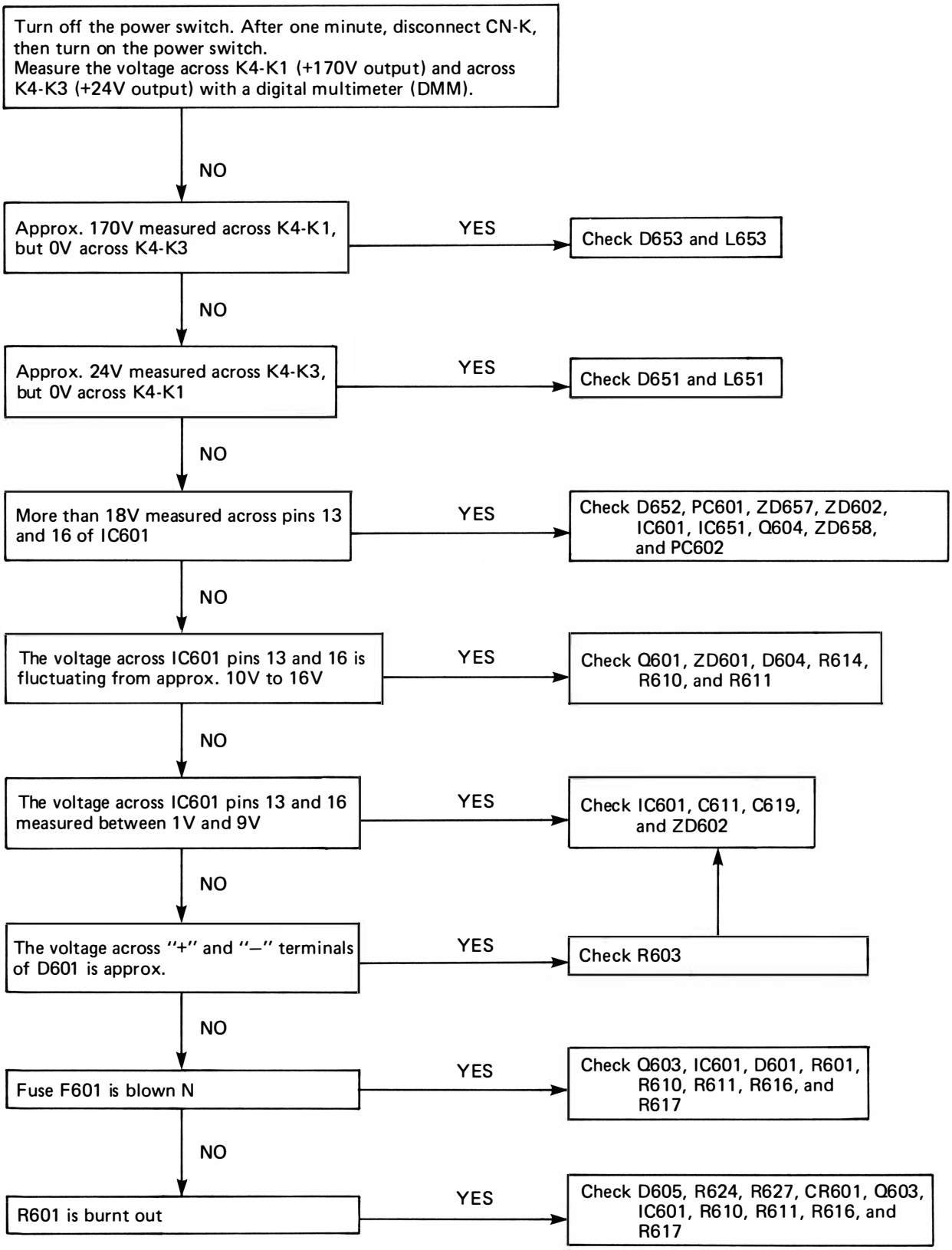

(2-2) MAIN PWB +B line FAILURE

Remove MAIN PWB from chassis·then
You should check following +B line loads.

(2-2-1) +24V line load
(2-2-2) +85V line load
(2-2-3) +170V line load

(2-2-1) +24V line FAILURE

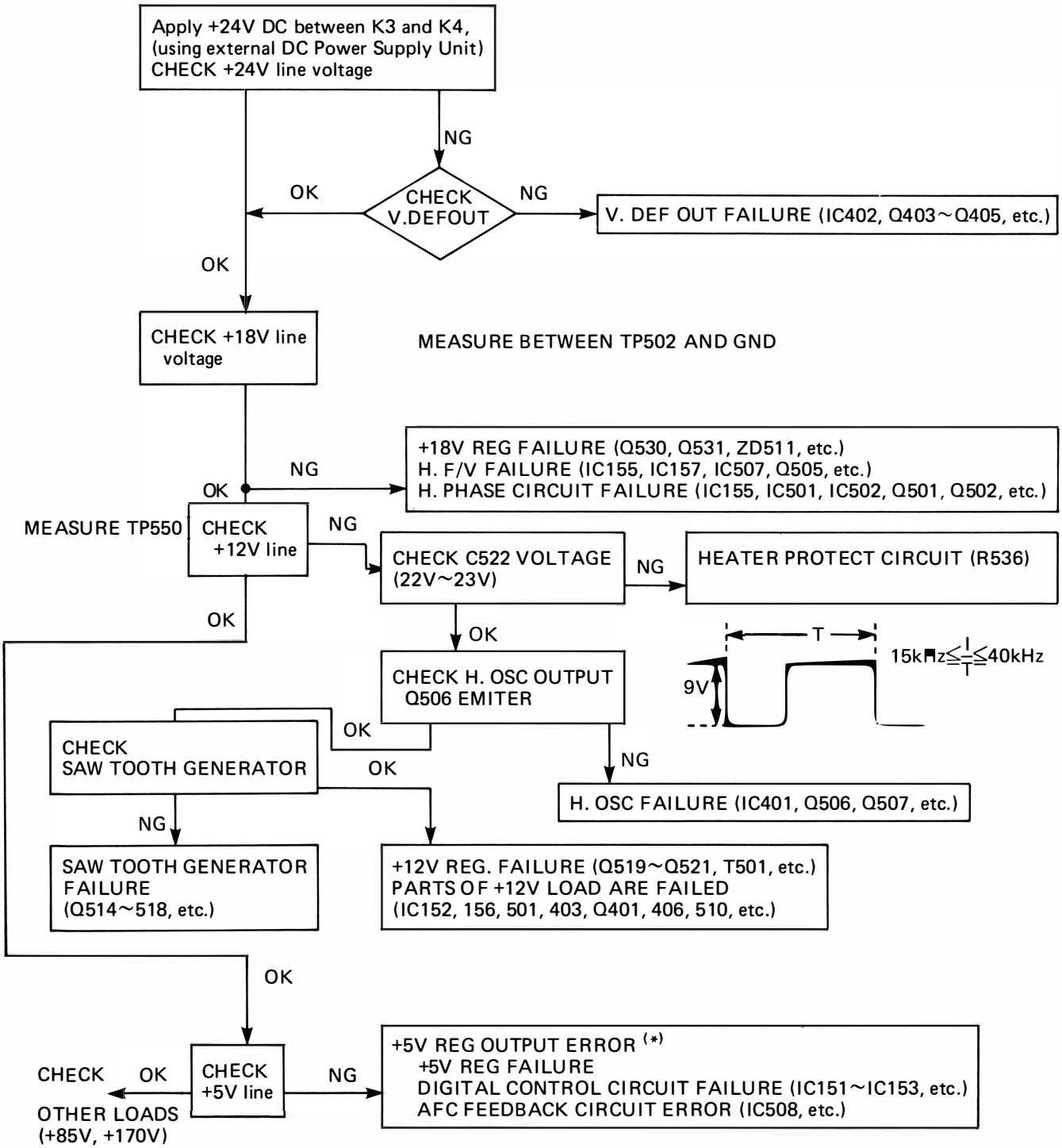

(*) If short mode at +5V line has occered, you must check Impeadance of R567. (8.2Ω 3W)

(2-2-2) +85V line FAILURE

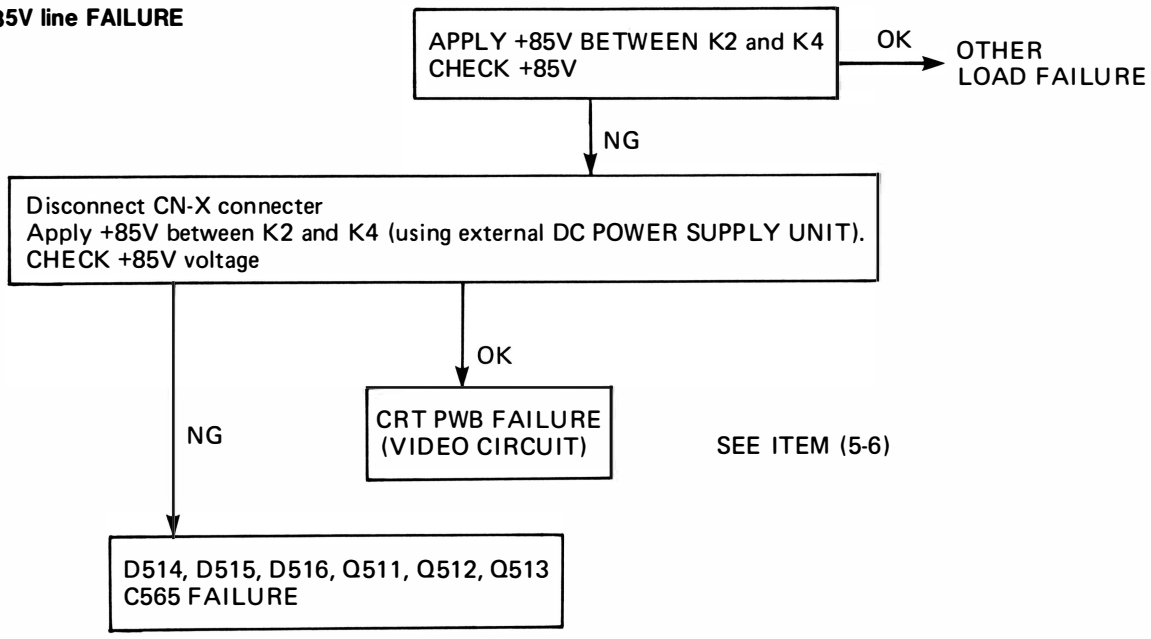

(2-2-3) +170V line FAILURE

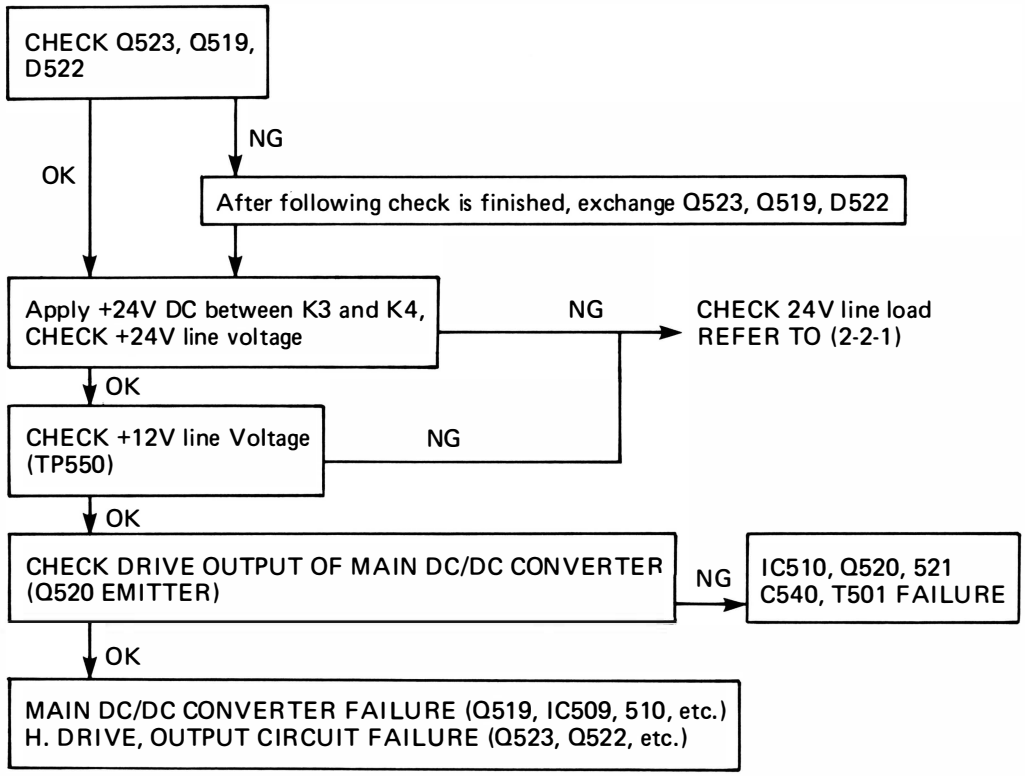

3. LACK OF STABLE SYNCHRONIZATION

(3-1) HORIZONTAL

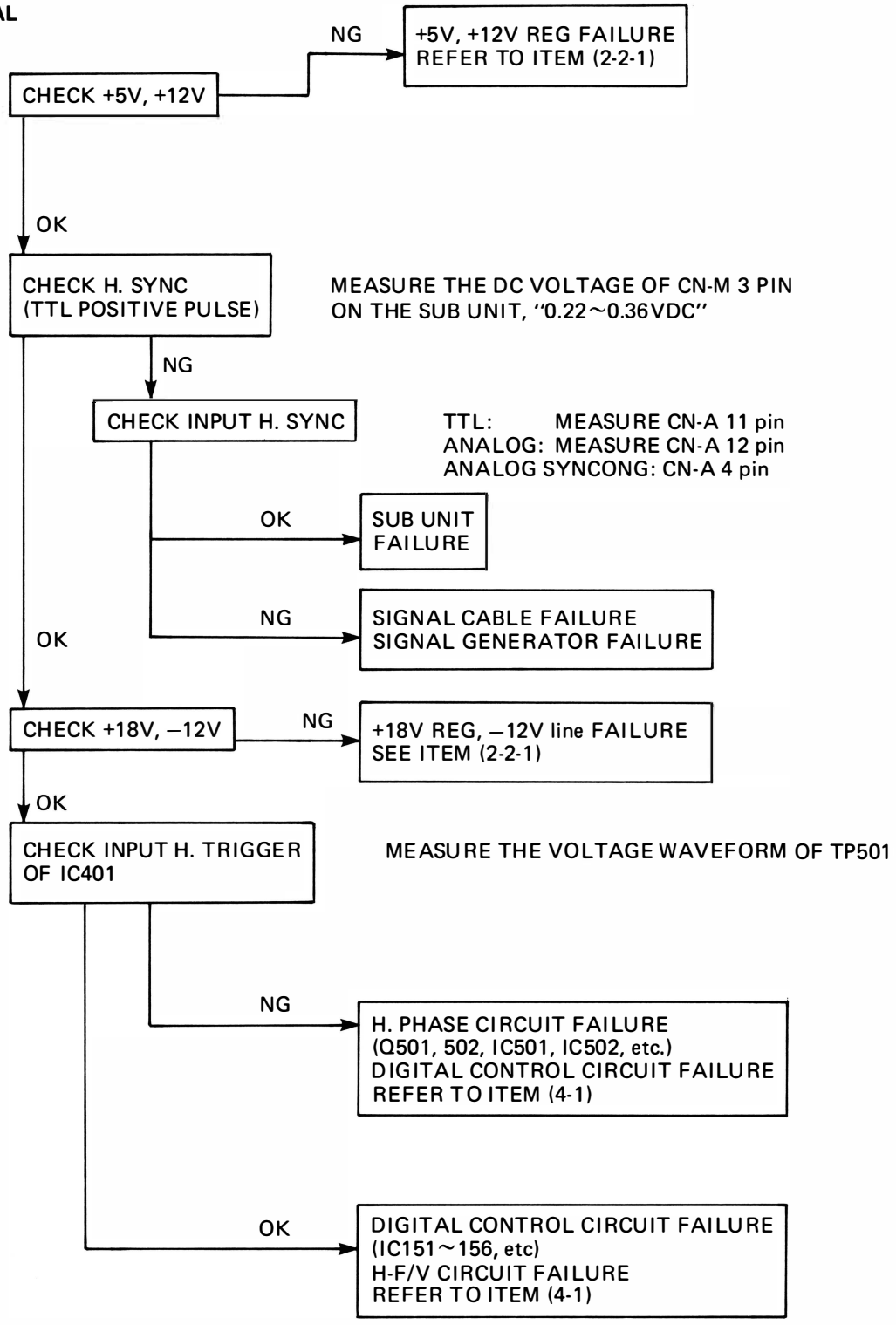

(3-2) VERTICAL

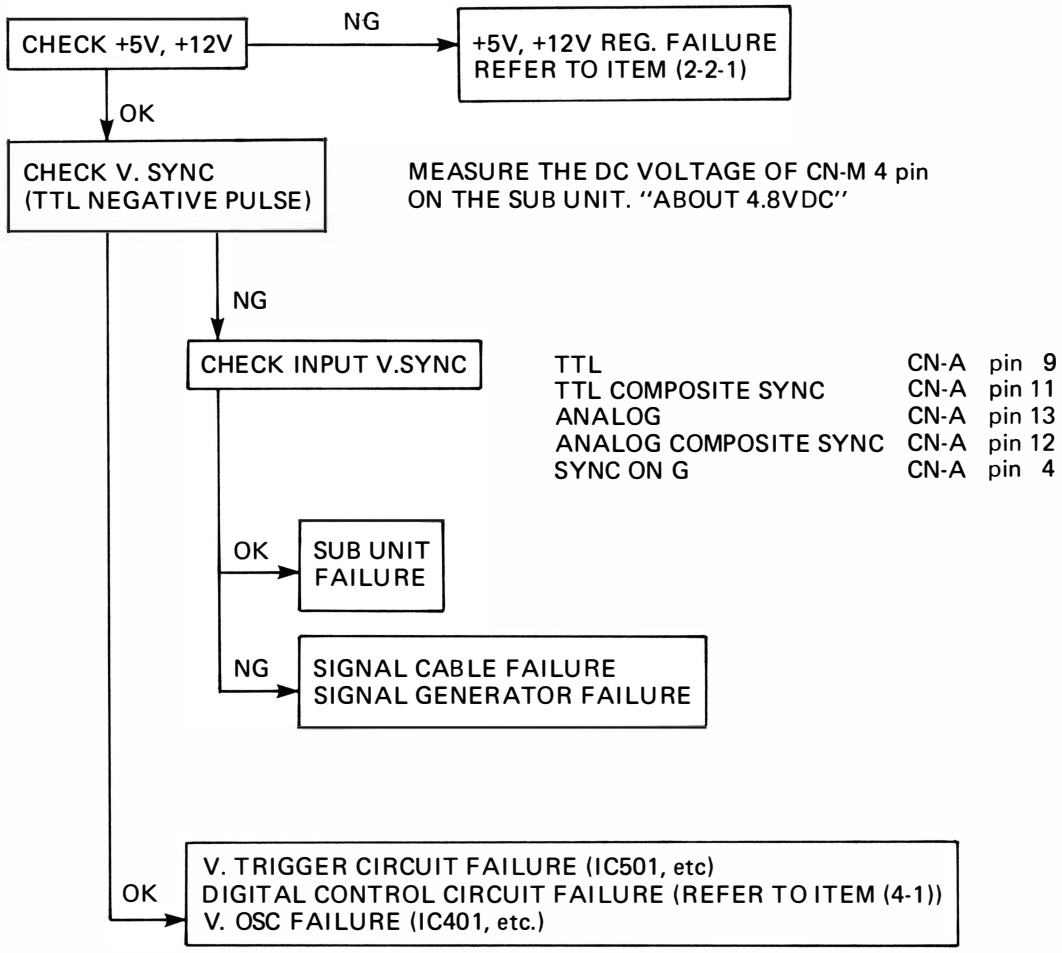
CHECK +5V, +12V
NG
+5V, +12V REG. FAILURE
REFER TO ITEM (2-2-1)
OK
CHECK V. SYNC
(TTL NEGATIVE PULSE)
MEASURE THE DC VOLTAGE OF CN-M 4 pin
ON THE SUB UNIT. "ABOUT 4.8VDC"
NG
CHECK INPUT V.SYNC
TTL CN-A pin 9
TTL COMPOSITE SYNC CN-A pin 11
ANALOG CN-A pin 13
ANALOG COMPOSITE SYNC CN-A pin 12
SYNC ON G CN-A pin 4
OK
SUB UNIT
FAILURE
NG
SIGNAL CABLE FAILURE
SIGNAL GENERATOR FAILURE
OK
V. TRIGGER CIRCUIT FAILURE (IC501, etc)
DIGITAL CONTROL CIRCUIT FAILURE (REFER TO ITEM (4-1))
V. OSC FAILURE (IC401, etc.)

4. DIGITAL CONTROL ERROR

(4-1) DIGITAL CONTROL ERROR

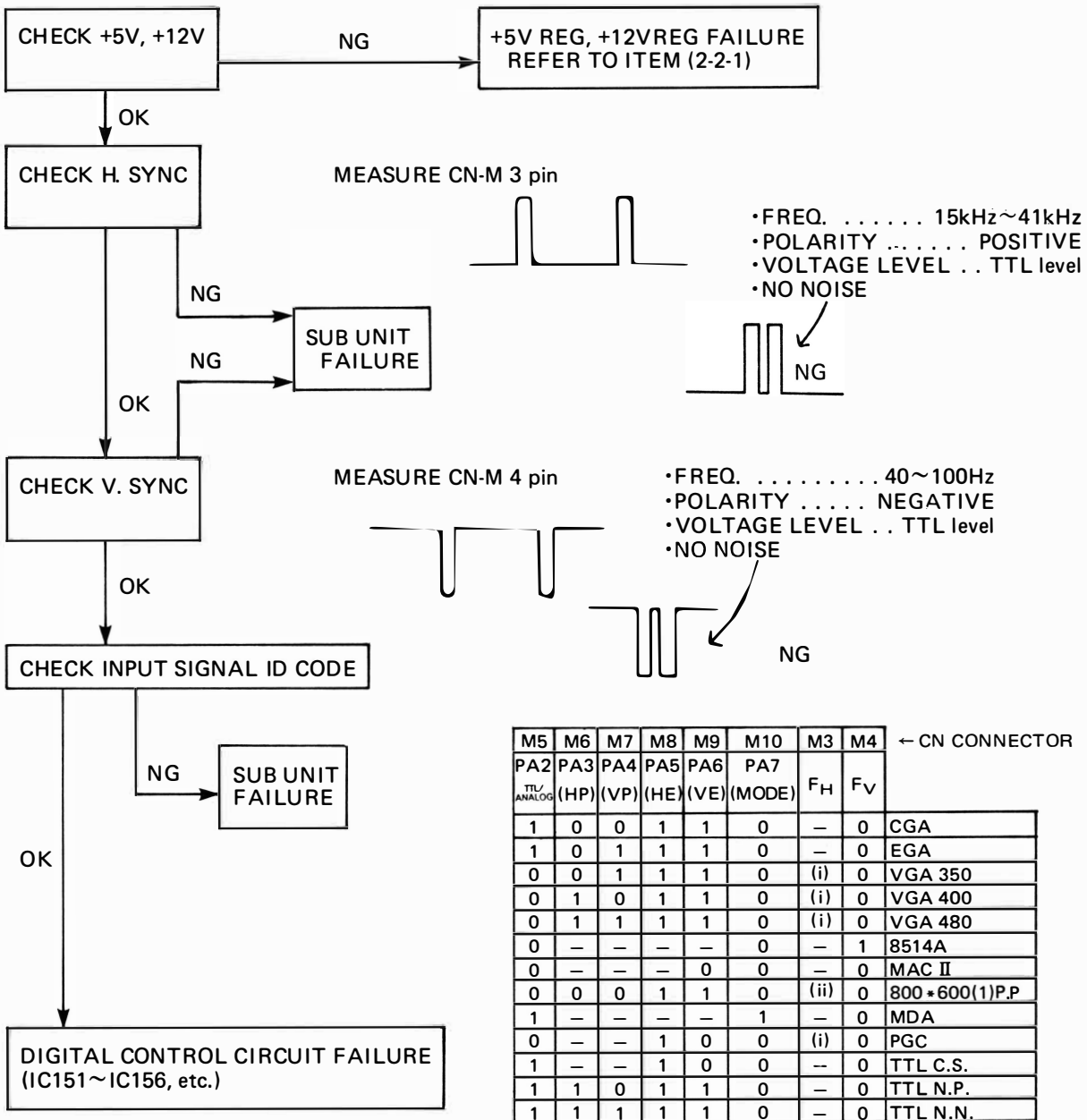

M5	M6	M7	M8	M9	M10	M3	M4	← CN CONNECTOR
PA2 TTL/ANALOG	PA3 (HP)	PA4 (VP)	PA5 (HE)	PA6 (VE)	PA7 (MODE)	F_H	F_V	
1	0	0	1	1	0	–	0	CGA
1	0	1	1	1	0	–	0	EGA
0	0	1	1	1	0	(i)	0	VGA 350
0	1	0	1	1	0	(i)	0	VGA 400
0	1	1	1	1	0	(i)	0	VGA 480
0	–	–	–	–	0	–	1	8514A
0	–	–	–	0	0	–	0	MAC II
0	0	0	1	1	0	(ii)	0	800*600(1)P.P
1	–	–	–	–	1	–	0	MDA
0	–	–	1	0	0	(i)	0	PGC
1	–	–	1	0	0	--	0	TTL C.S.
1	1	0	1	1	0	–	0	TTL N.P.
1	1	1	1	1	0	–	0	TTL N.N.
0	0	0	1	1	0	(i)	0	ANALOG(1)P.P
0	–	–	1	0	0	(ii)	0	ANALOG(2)C.S.
0	–	–	–	–	1	–	0	USER
0	0	1	1	1	0	(ii)	0	800*600(2)
0	1	0	1	1	0	(ii)	0	800*600(3)
0	1	1	1	1	0	(ii)	0	800*600(4)

F_H { (i) 15kHz~33kHz
(ii) 33kHz~40kHz

F_V { 0 40~75Hz
1 75~100Hz

(4-2) USER CONTROL ERROR

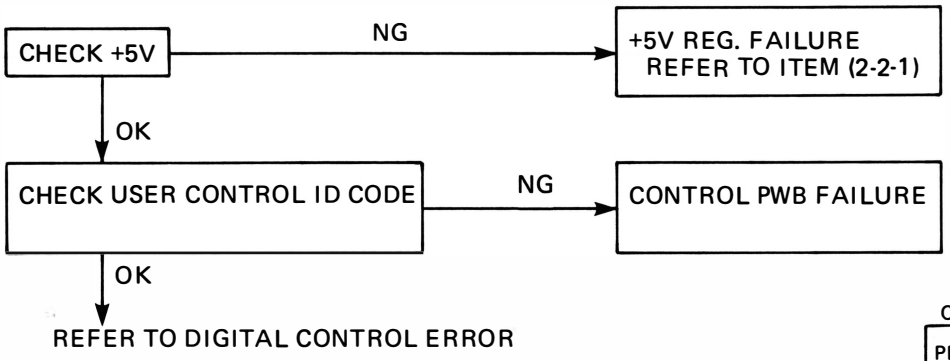

(Cf). If two switches are pushed at the same time, the monitor will be disabled, and the user controls will not function when pressed simultaneously.

C1 PD0 (CS0)	C2 PD1 (CS1)	C3 PD2 (CS2)	
0	0	0	–
0	0	1	BRIGHT
0	1	0	CONT
0	1	1	H.POSI
1	0	0	H.SIZE
1	0	1	V.POSI
1	1	0	V.SIZE
1	1	1	DISABLE

C4 PD3	C5 PD4	
1	0	UP
0	1	DOWN
1	1	DISABLE

(4-3) MEMORY ACCESS ERROR

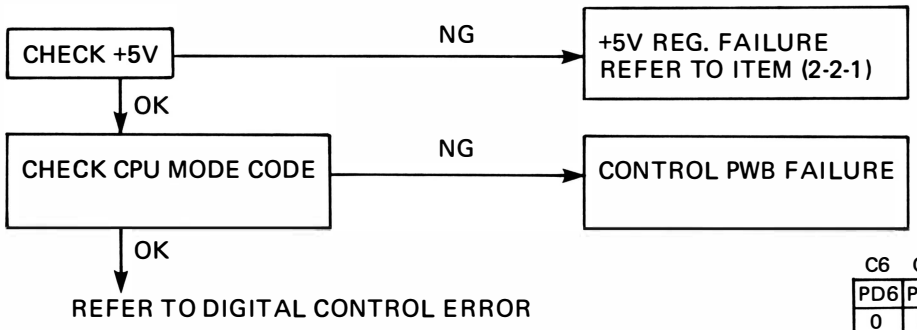

C6 PD6	C7 PD7	
0	0	USER CONTROL MODE
0	1	FACTORY ADJ. MODE
1	0	DATA LOAD
1	1	FACTORY DATA WRITING

(Cf). If two different signals are put into the same memory location, the most recent signal will be written to this memory and the previous signal erased. Therefore, an error could occur when the microprocessor will have the same ID code for two different signals.

MDA ..... TTL, MODE SW → ON
PGC ..... ANALOG, COMPOSITE SYNC, MODE SW → OFF
MACII ..... ANALOG, SYNC ON G, MODE SW → OFF

5. ABNORMAL PICTURE

(5-1) ABNORMAL HORIZONTAL WIDTH

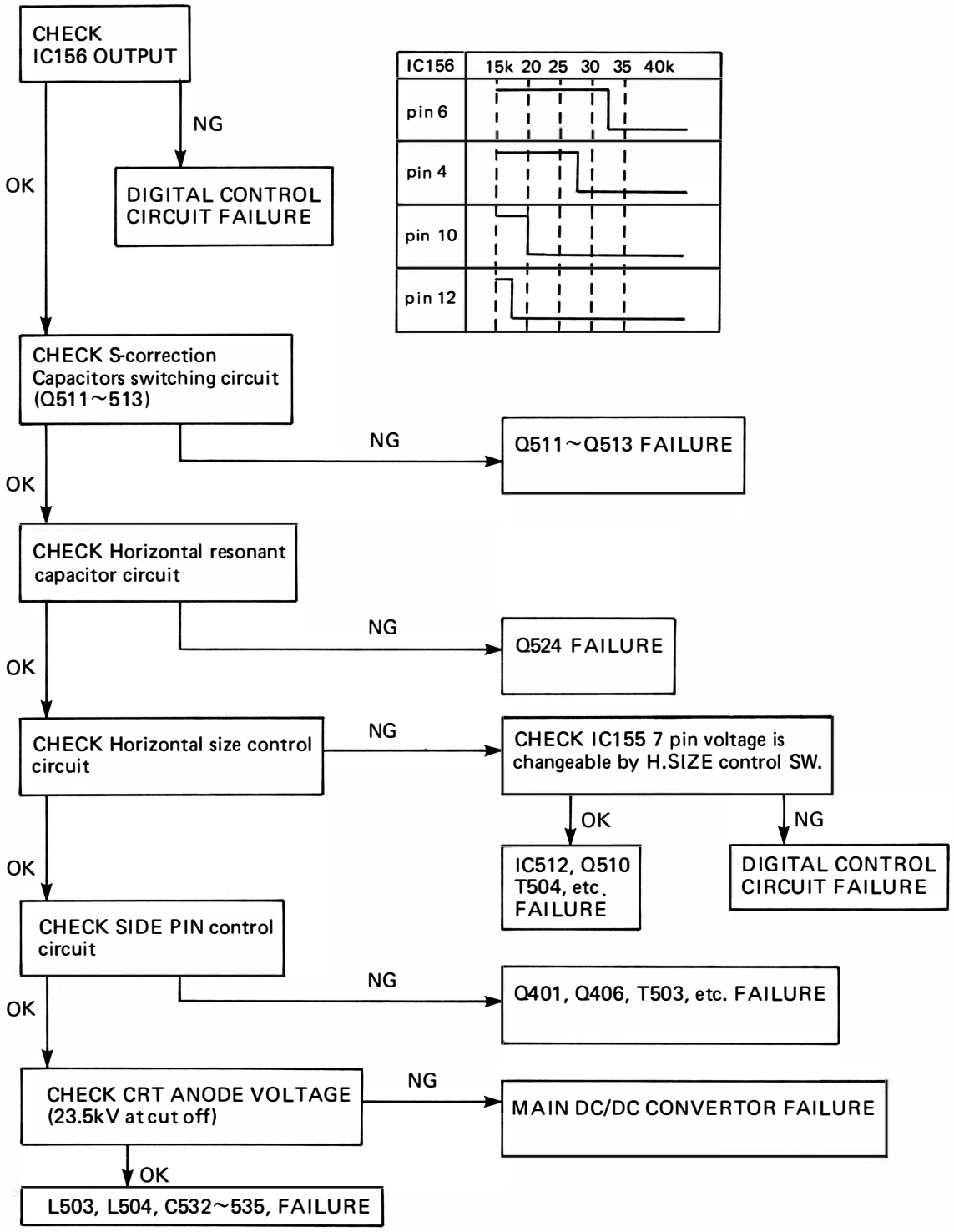

(Cf). In the case of Factory adjustment at Horizontal width.
If it occers abnormal size by using width coil, please check
Input signal conditions. It must be setted VGA mode, Analog.

(5-2) ABNORMAL VERTICAL SIZE

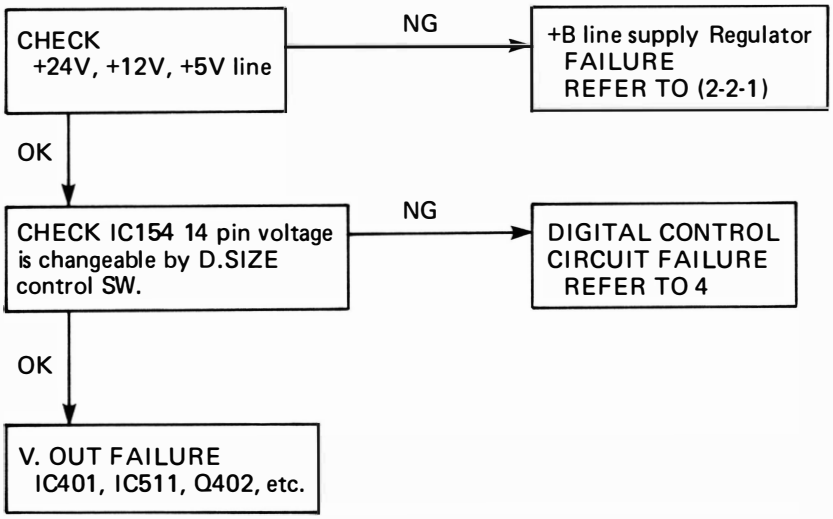

(5-3) ABNORMAL HORIZONTAL PICTURE POSITION

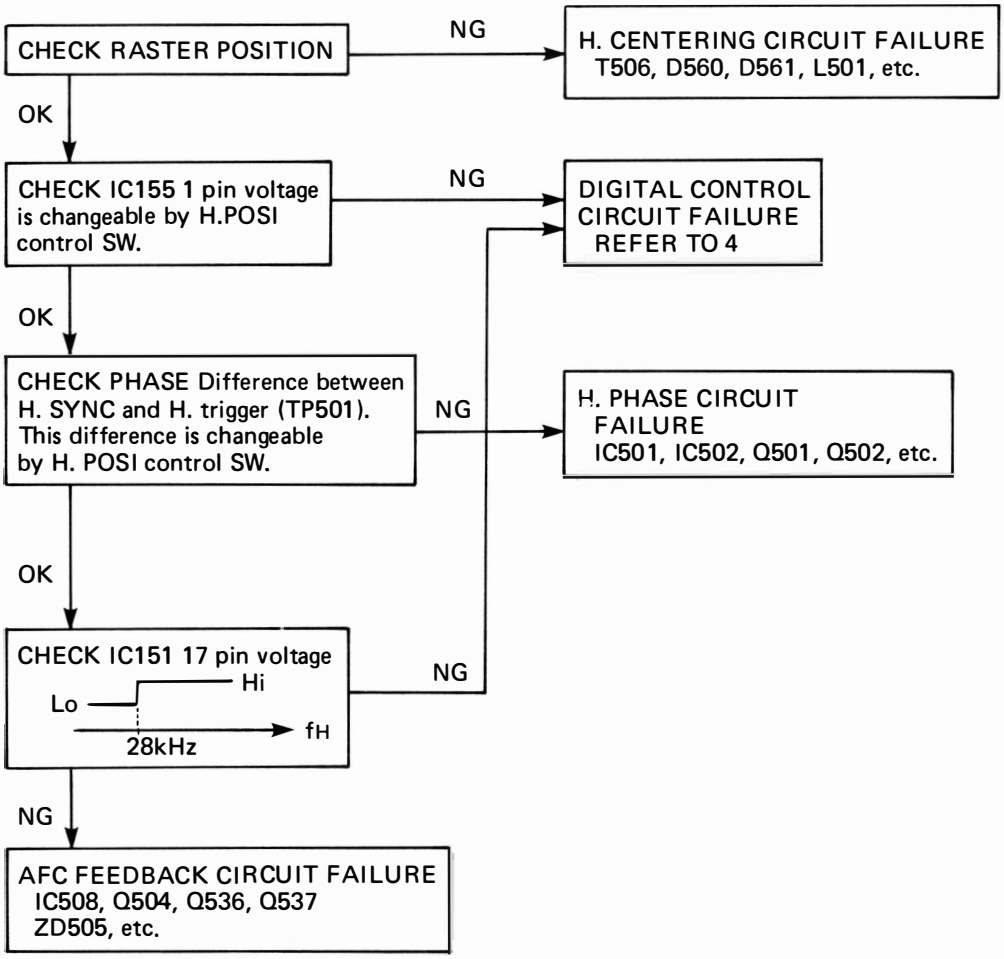

(5-4) ABNORMAL VERTICAL PICTURE POSITION

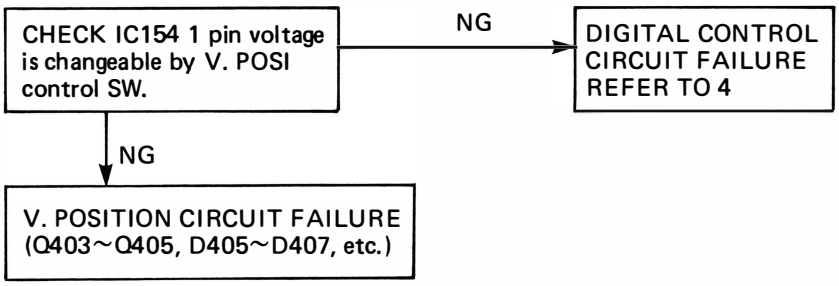

(5-5) ABNORMAL VERTICAL SCAN

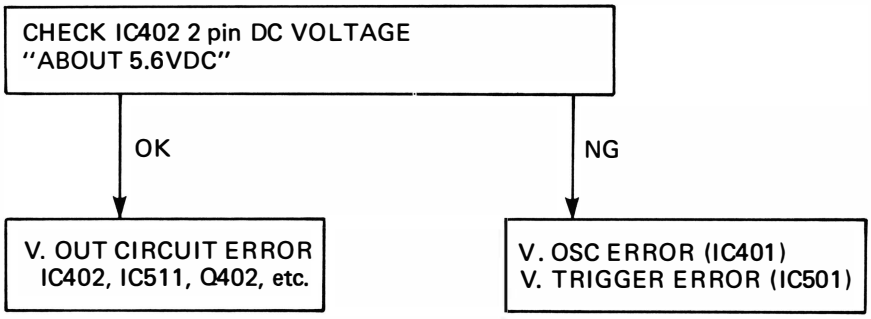

(5-6) ABNORMAL VIDEO

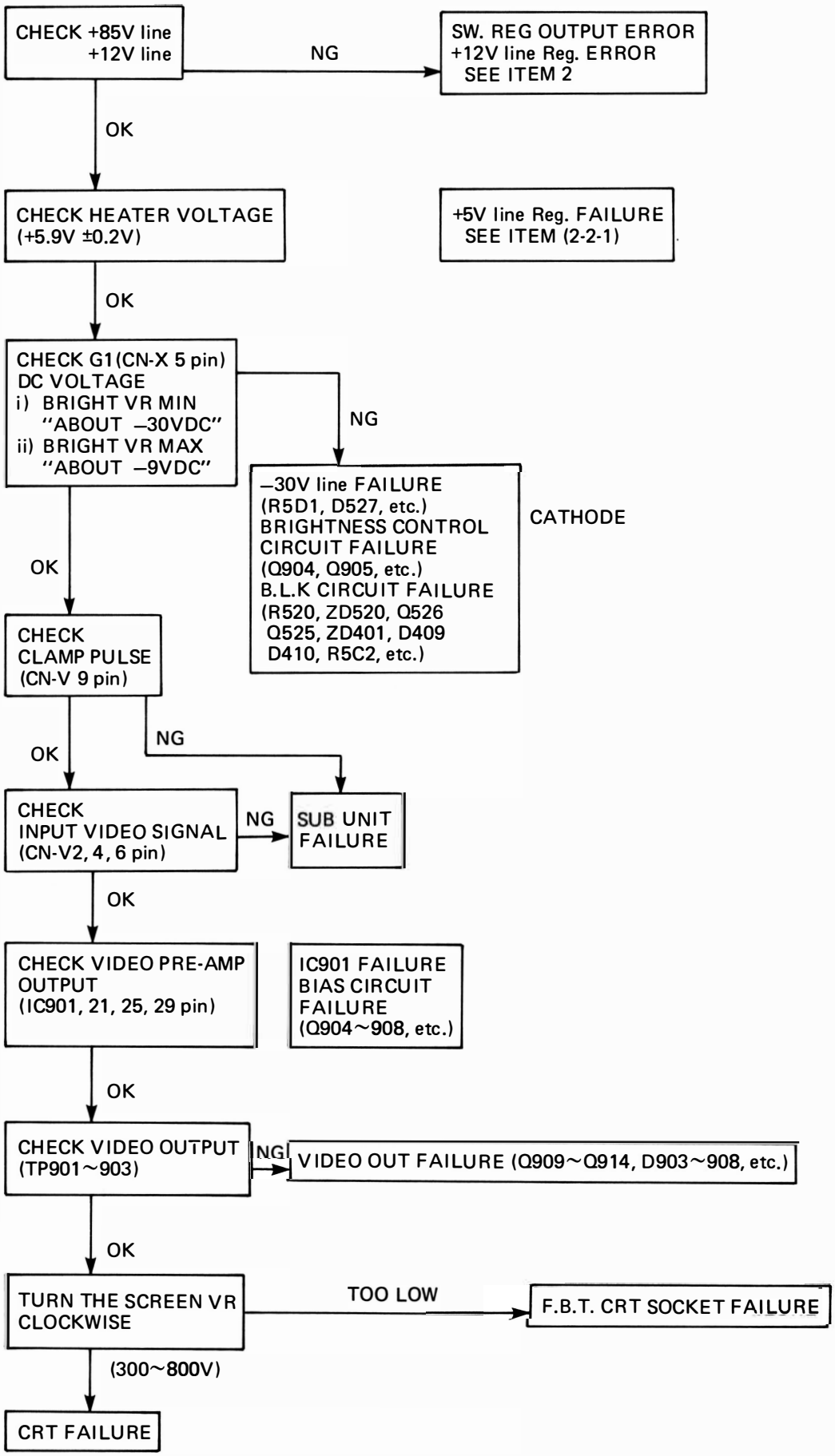

(5-7) SIDE PIN CUSHION DISTORTION FAILURE

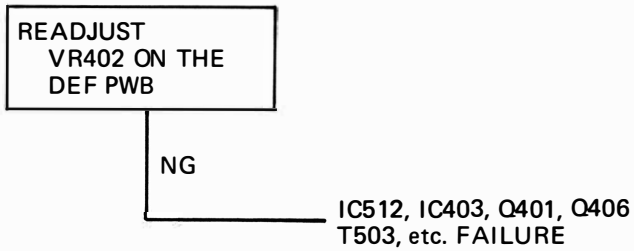

(5-8) POOR FOCUS

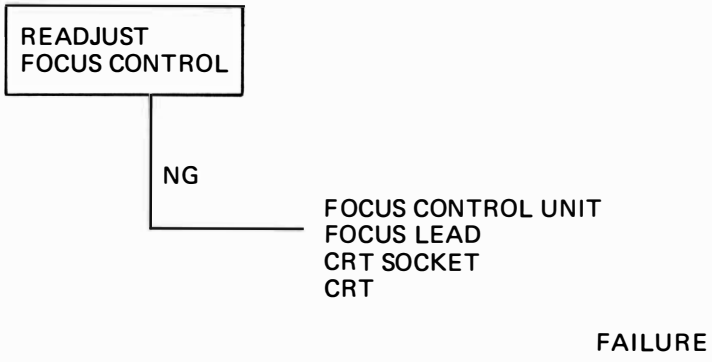

(5-9) IMPURITY ON CRT SCREEN

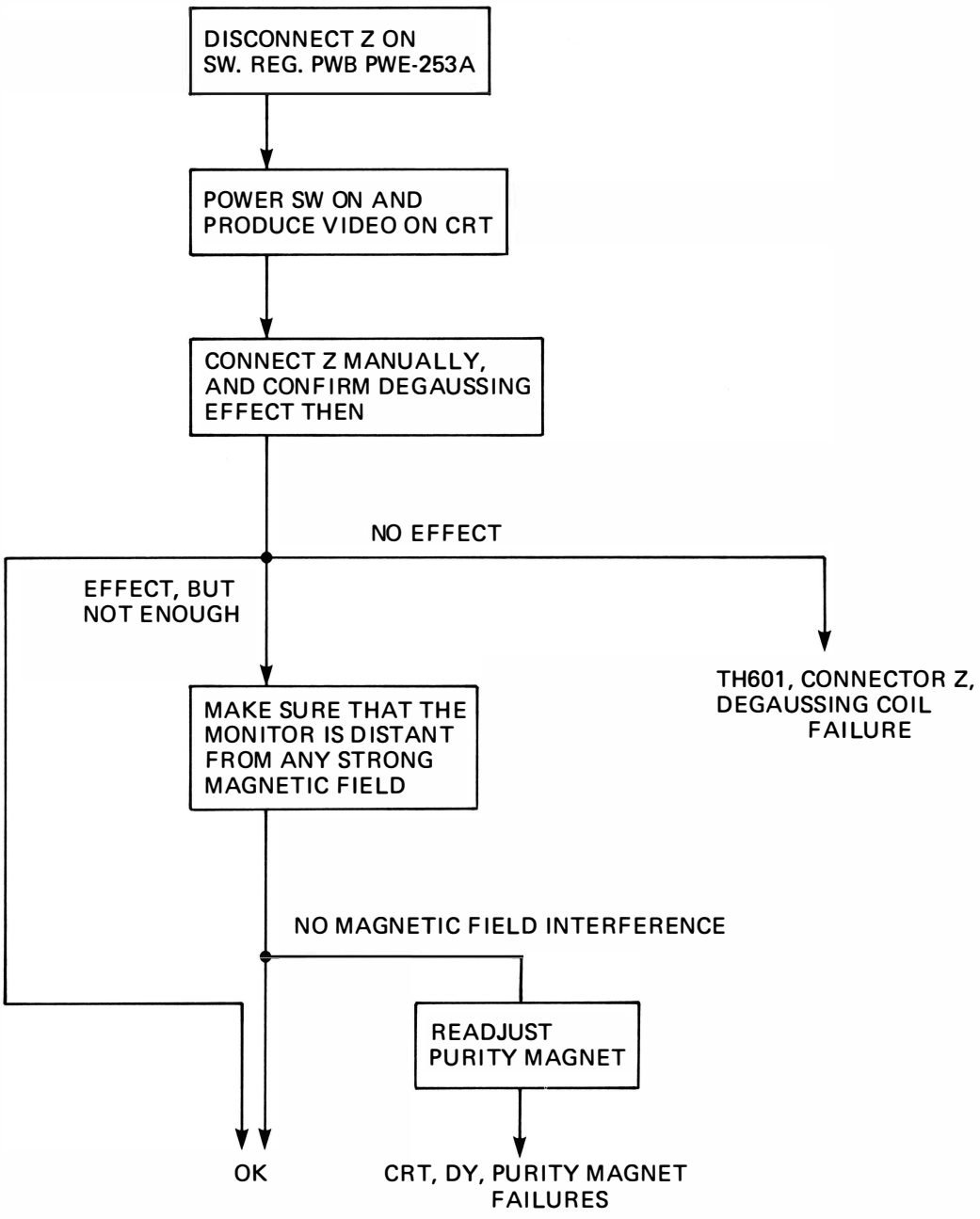

THEORY OF OPERATION

TABLE OF CONTENTS

1. CONSTRUCTION

(1-1) CRT
(1-2) Power Supply Circuit
(1-3) Deflection Circuit
(1-4) Interface Circuit
(1-5) Video Circuit
(1-6) Digital Control Circuit

2. CIRCUIT DESCRIPTION

(2-1) Power Supply Circuit
- (2-1-1) Switching regulator unit
- (2-1-2) Main DC/DC converter
- (2-1-3) +12V chopper regulator
- (2-1-4) +18V regulator
- (2-1-5) +5V regulator
- (2-1-6) −12V, −30V line

(2-2) Deflection Circuit
- (2-2-1) Horizontal deflection unit
- (2-2-2) Vertical deflection circuit
- (2-2-3) H.V. circuit

(2-3) Interface Circuit
- (2-3-1) Video interface
- (2-3-2) Sync interface

(2-4) Video Circuit

(2-5) Digital Control Circuit
- (2-5-1) Digital control unit
- (2-5-2) H-F/V converter
- (2-5-3) V-F/V converter
- (2-5-4) H. PHASE circuit
- (2-5-5) H. size circuit
- (2-5-6) V. position circuit
- (2-5-7) V. size circuit

1. CONSTRUCTION

Multisync 3D consists of six major modules:

(1-1) CRT
(1-2) Power supply module
(1-3) Deflection module
(1-4) Interface module
(1-5) Video module
(1-6) Digital control module

(1-1) CRT

The CRT is a Vacuum Tube which generates focus beams of electrons that are deflected by the deflection yoke. These beams contact with the phosphor surface of the CRT produce light.
The fluorescent surface of the CRT has three different colors of phosphors. An electron gun which consist of the metal coil heater, a cathode, and five grids all mounted in line (on the same horizontal axis) on the same shaft. The three beams (Red, Green, and Blue) of the electron gun pass thru the shadow mask before stricking the phosphorus surface of the CRT. The shadow mask ensures that the beams will stricke only their corresponding phosphor colors on the screen.
A combination of Red, Green, and Blue phosphor dots stricked with the correct amplitude can produce any color.

(1-2) Power Supply Circuit

Many different D.C. power supply voltages are produced in the MS-3D.
The following is listing of them:

a) +170V
b) +85V
c) +24V
d) Variable main DC/DC converter output (+B line for H.OUT module)
e) +18V
f) +12V
g) +6V
h) +5V
i) –12V
j) –30V

Voltages a) thru c) are supplied by the Switching Regulator Unit (PWE-253A) and Voltages d) thru j) are generated on the MAIN PWB (PWE-248A) by using Voltages a) and c) line power as the source.

(1-3) Deflection Circuit

Consists of the following three circuits:

a) Horizontal deflection
b) Vertical deflection
c) High voltage circuit for the CRT (Flyback Trans)

(1-4) Interface Circuit (SUB UNIT PWE-250)

It has the following three functions:

a) VIDEO Interface to the Video circuit
b) SYNC Interface for the Deflection circuit and the Digital control circuit
c) Digital Interface for the Digital control circuit

The sub unit sends an identification signal to the digital control circuit as to the type of PC or video graphics card to which the monitor is currently interfaced with.

(1-5) Video Circuit

The video signal sent by the Interface circuit is amplified by this circuit and supplied to the cathode of the CRT.

(1-6) Digital Control Circuit

The digital control circuit has the following functions: For a more detailed information please refer to the circuit description (2-5).

a) Automatic synchronization
b) Management of the displaying proper picture
   - Automatic signal identification
   - Automatic sizing
   - Automatic centering
   - Management of picture data
c) Management of user controls
d) Management of factory adjustment

The following outputs are produced by the D/A (Digital to Analog) Converter (μPD6336C).

e) H-F/V converter output
f) V-F/V converter output
g) Horizontal size control output
h) Horizontal position control output
i) Vertical size control output
j) Vertical position control output

2. CIRCUIT DESCRIPTION

(2-1) Power Supply Circuit

(Fig. 2-1) Block Diagram of the D.C. Power Supply of the MS-3D.

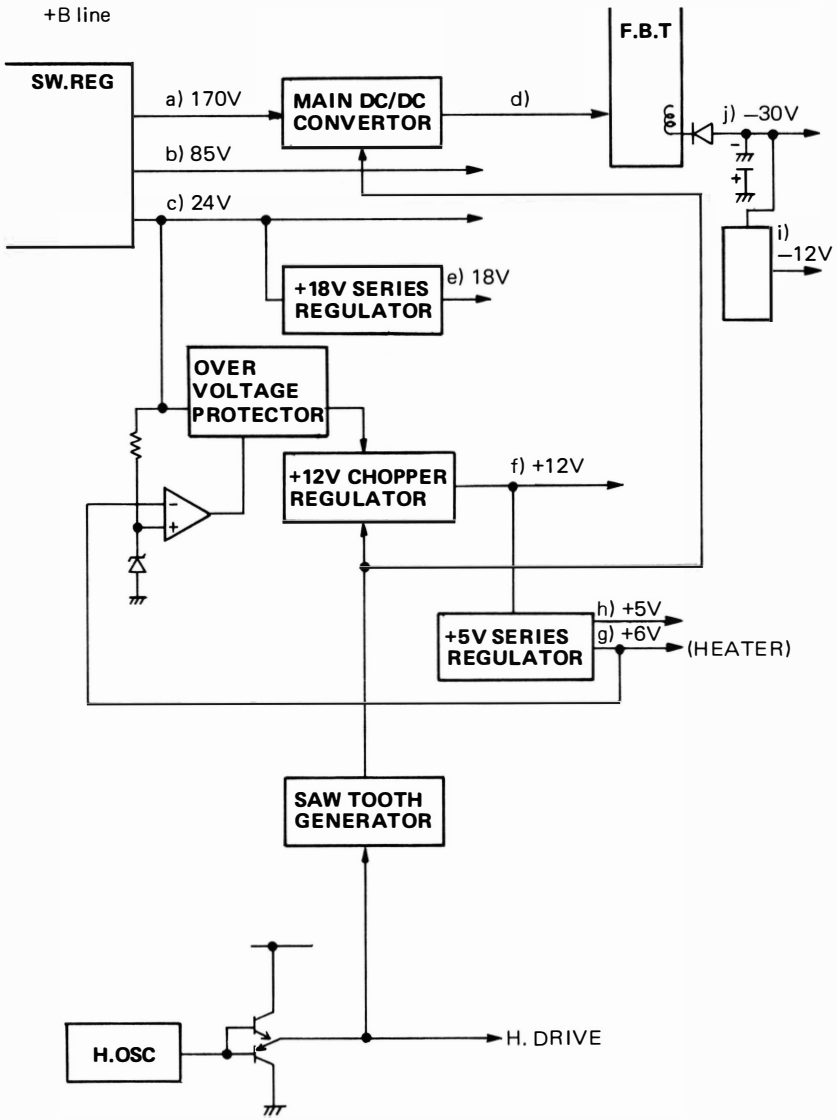

(2-1-1) SWITCHING REGULATOR UNIT

(a) Rectifying & filtering circuit

AC input is rectified by D601. Then, it is filtered by C606. The resulting DC voltage is supplied to the converter circuit.

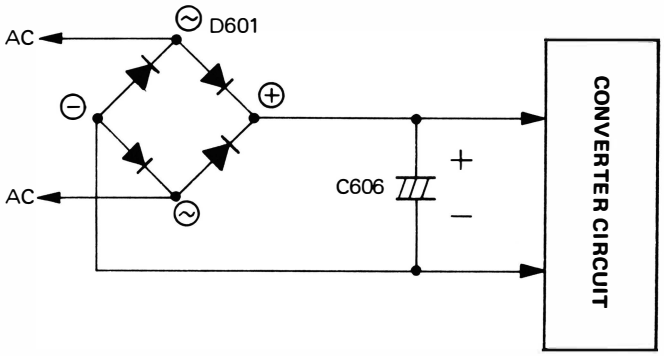

(Fig. 2-1-1) Rectifying & Filtering Circuit

(b) Auxiliary power supply circuit

The auxiliary power supply circuit is needed to activate IC601. At the time of power ON, charging current flows into the capacitor C619 via R603. Oscillation starts when the voltage of IC601 pin 16 reaches 17V by this charging operation.

After the start of oscillation, the foward voltage of the auxiliary coil for the switching transformer is rectified and filtered by D604 and C611, and regulated by Q601. The resultant DC voltage is supplied to IC601.

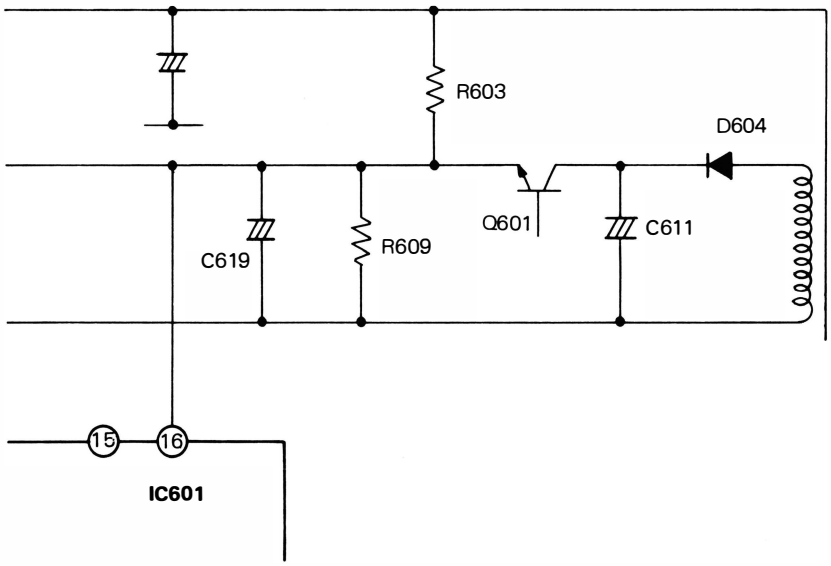

(Fig. 2-1-2) Auxiliary Power Supply Circuit

(c) Converter circuit

The converter circuit consists of the primary winding of the switching transformer T601, a switching device Q603, and surge absorbers (C608, R606, C609, D603, and R607) that are connected in serial to the primary winding.

The oscillating signal from IC602 pin 2 is applied to the gate of Q603 causing the drain-source to be turned on and off so that oscillating voltage is applied to the primary winding of T601.

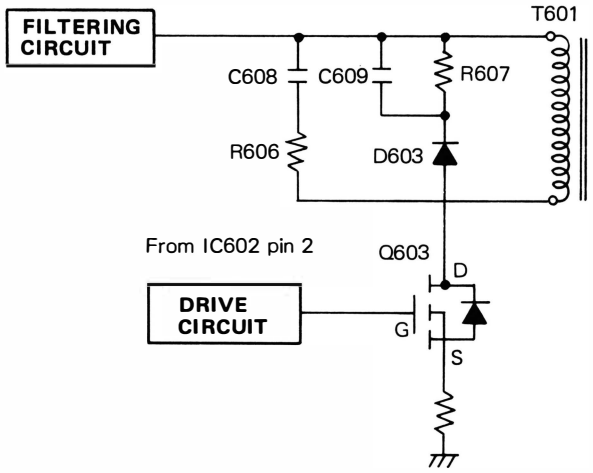

(Fig. 2-1-3) Converter Circuit

(d) Output filtering circuit

The fly-back voltage generated at the secondary windings of the switching transformer T601 are rectified by D651, D652, and D653. The, it is filtered by C653, C654, C656, C657, C663, and C664 so that rectified DC voltages are obtained.

The fly-back voltage is constantly maintained by controlling the ON period duty cycle of Q603 in the converter circuit.

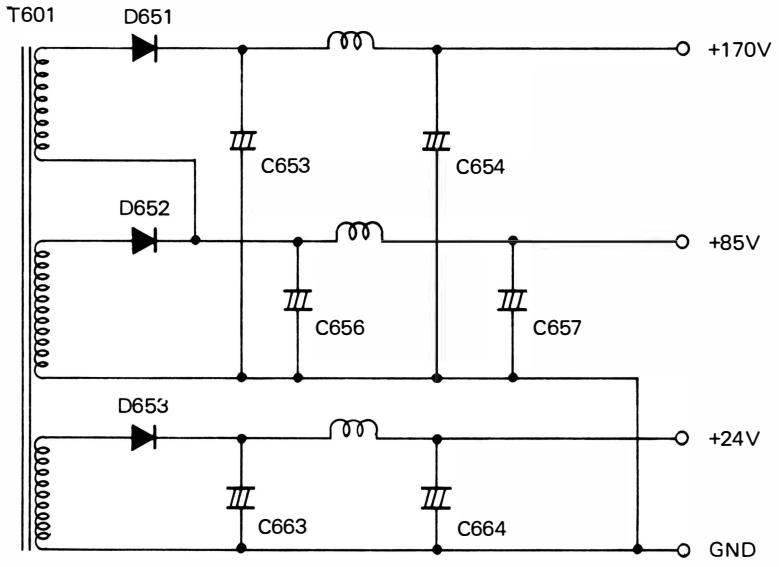

(Fig. 2-1-4) Output Smoothing Circuit

(e) Error detection amplifier circuits

The output voltage 85V is divided by the network resistors. This divided voltage is compared to the reference voltage at the error amplifier IC651. An error signal is applied to the control circuit via the photocoupler PC601.

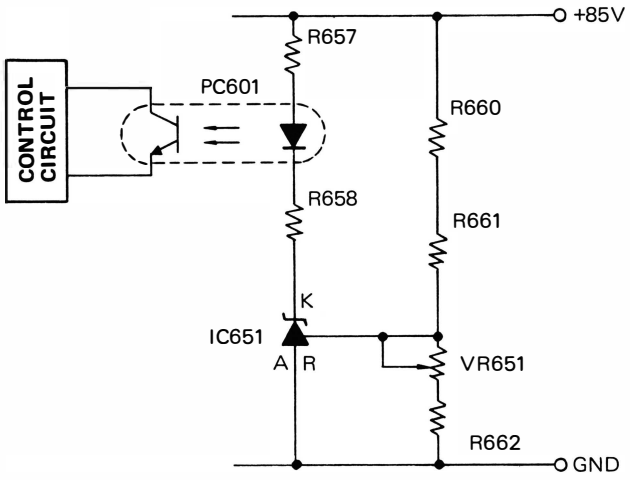

(Fig. 2-1-5) Error Detection Amplifier Circuit

(f) Oscillating circuit, control circuit, and drive circuit

The oscillating, control, and drive circuits are comprised in IC601.

IC601 has a built-in oscillator whose frequency is determined by R622, C617, and R619 connected to pins 9, 10, and 11, respectively.

The output of the error detection amplifier circuit is fed back to the control circuit from pin 8 via PC601 to control the duty cycle of Q603 so that output voltage is kept constant.

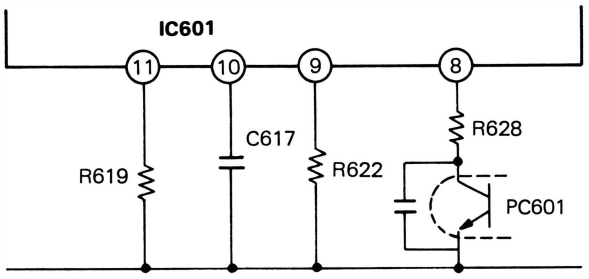

(Fig. 2-1-6) Oscillating & Control Circuits

(g) Overvoltage protection

If some failure occurs and the 24[V] line output increases beyond 29[V], the voltage at the output is sensed by the Zener Diode ZD658.

This Diode (ZD658) will activate the LED within the photocoupler PC602, turning on the transistor within it. Once the transistor is on, pin 6 of IC601 will go high, stopping the oscillation within this IC.

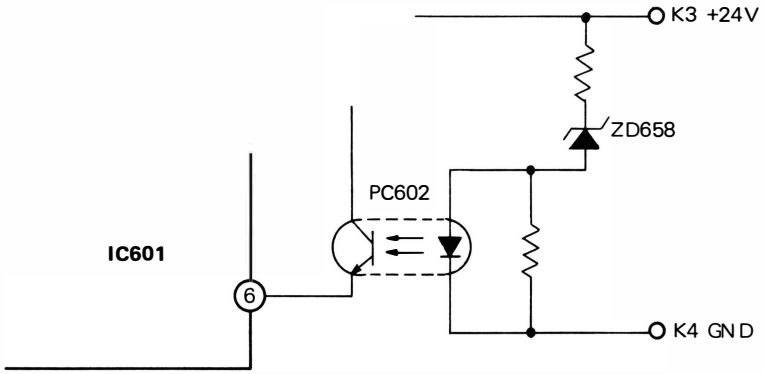

(Fig. 2-1-7) Overvoltage Protection Circuit

(2-1-2) MAIN DC/DC CONVERTER (d)

This converter's output is the power source for the Flyback Transformer. It is controlled by PWM method and synchronized by the Horizontal OSC. output.

Output voltage of this converter is varied in respect to Horizontal OSC. frequency so that the voltage level of the Flyback pulse is constant for any frequency. This Constant Voltage level will also produce a constant Horizontal Raster size for any frequency. If H.OSC. stops the output of this converter will become low (in order to protect the CRT beam spot).

The relationship between Output Voltage and H.OSC. frequency is shown in Fig. 2-1-2a.

BLOCK DIAGRAM of this regulator is shown in Fig. 2-1-2b.

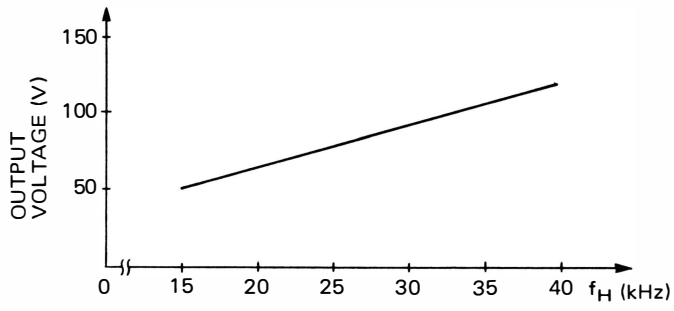

(Fig. 2-1-2 a) Relationship between the Output Voltage and the H.OSC. Frequency.

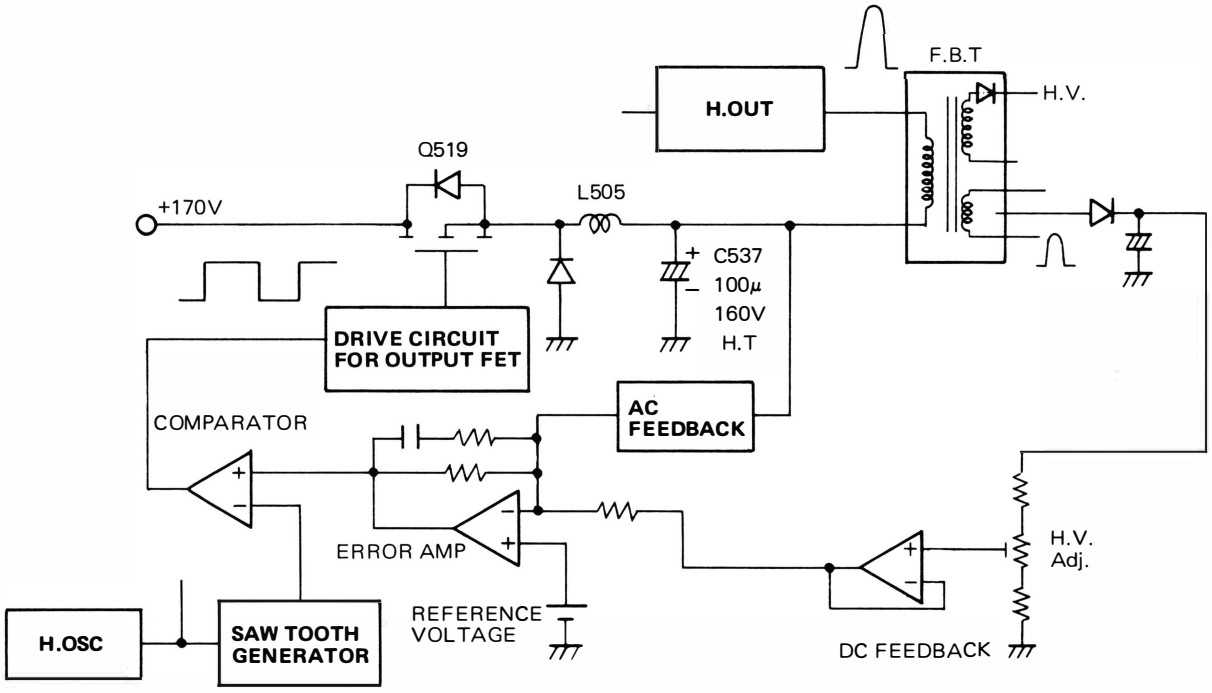

(Fig. 2-1-2b) BLOCK DIAGRAM of Main DC/DC Converter.

(2-1-3) +12V chopper regulator (f)

This regulator is PWM controlled and synchronized with the H.OSC. output of the DC/DC converter. The regulator's feedback circuit provides a constant and stable output voltage for any conditions (H.OSC. Frequency and +12V line load variations). If the H.OSC. operation stops, this output voltage will become low.

The BLOCK DIAGRAM is shown in Fig. 2-1-3.

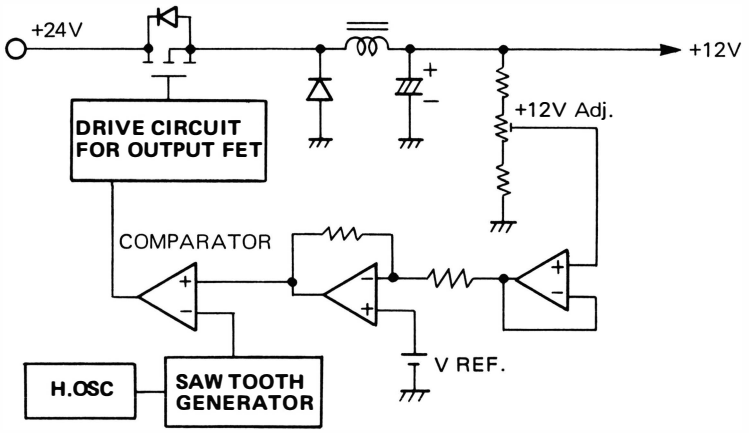

(Fig. 2-1-3) BLOCK-DIAGRAM of +12V Regulator.

(2-1-4) +18V regulator (e)

The H-F/V converter, the H.OSC., and the H.HOLD circuit are supplied by this voltage line. Therefore, this line requires an exact voltage of 18V±0.1V.

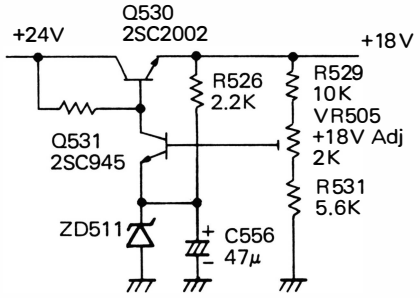

(2-1-5) +5V regulator (g and h)

This circuit generates a +6V and a +5V from the +12V line.
The +6V is used for the CRT heater, and the +5V is for the digital control and the AFC feedback circuits.

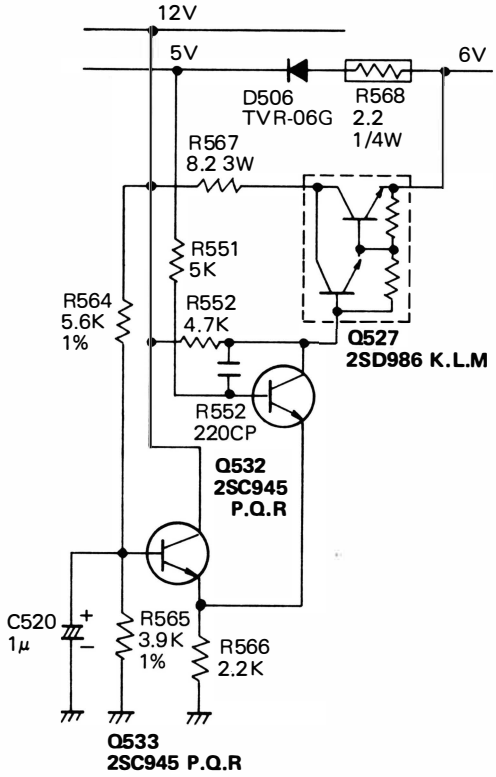

(2-1-6) -12V and -30V lines (i and j)

The −30V is produced by rectifing the flyback pulse. The −12V is produced by the reverse biasing of the zener diode.

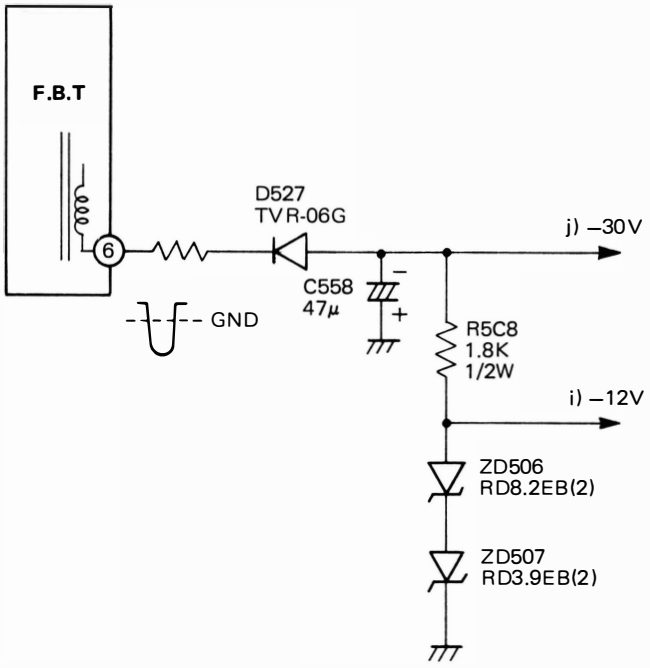

(2-2) Deflection Circuit

(2-2-1) HORIZONTAL DEFLECTION UNIT

(a) Horizontal drive circuit

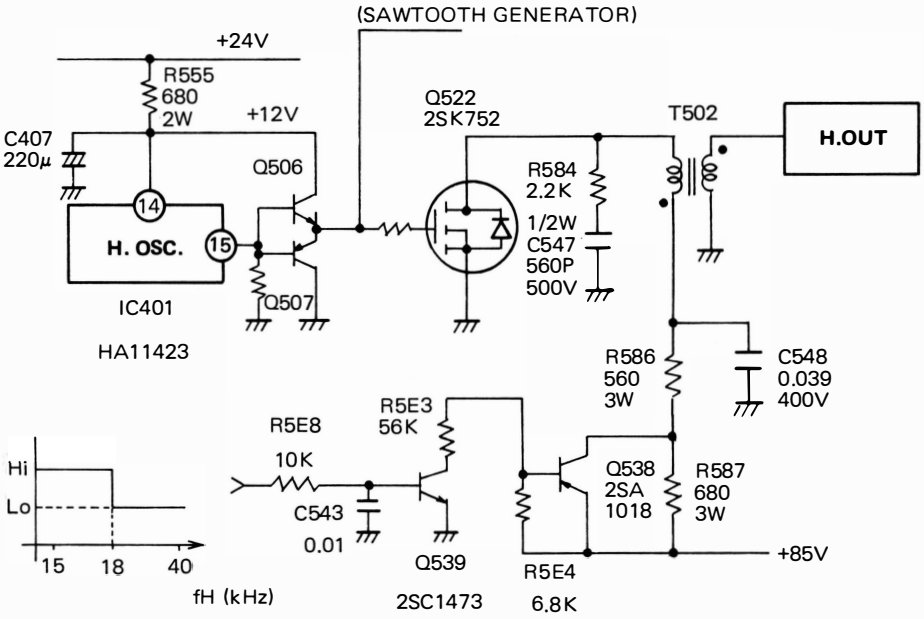

The horizontal pre-drive pulse produce at IC401 pin 15 is applied to Q522. Then, it is amplified by T502 to turn on the horizontal output transistor Q523.

NOTE: When the horizontal frequency is less than 28 kHz, the power is supplied to T502 via R586 from the +85V line. And, when horizontal frequency is more than 28 kHz, the power is supplied via R586 and R587 from the +85V line.

(b) Horizontal output circuit

This circuit produces a sawtooth current waveform to the Horizontal DY by switching Q523 and D522 ON and OFF. In order to meet wide a range of frequencies (15~38 kHz), several circuit and changed in corresponding frequency bands.

- Horizontal resonant capacitor . . . . . 17 kHz
- S-correction capacitor
  - $f_H \leqq 20$ kHz
  - $20 < f_H \leqq 27$ kHz
  - $27 < f_H \leqq 33$ kHz
  - $33 < f_H \leqq 38$ kHz
- Drive circuit of Q523 . . . . . 28 kHz

Due to this switching circuit and multiple DC outputs from the DC to DC converter circuit, the MS 3D can practically the same size raster and linearity for a wide range of frequencies.

(2-2-2) Vertical deflection circuit

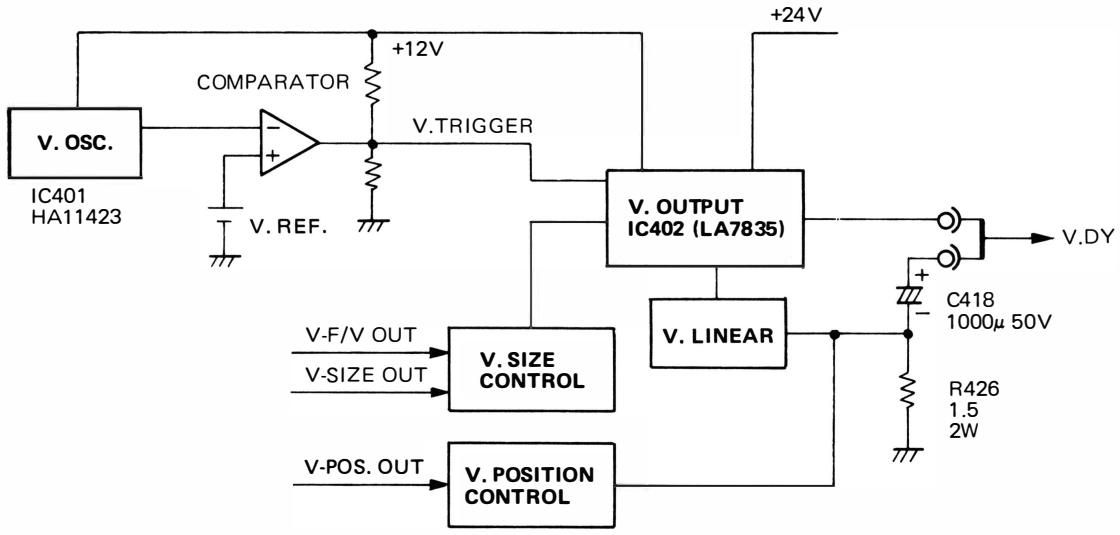

(Fig. 2-2-2) BLOCK DIAGRAM of vertical deflection

The vertical deflection circuit produces a sawtooth current waveform to the vertical D.Y. The output of IC402 (LA7835) is suited for multi-scanning monitors because it easily controls the vertical size (by DC control) and is also easy to synchronize.

(2-2-3) H.V. circuit

The H.V. circuit supplies high voltage (23.5 kV) to the anode of the CRT. This circuit is composed of the fly-back transformer and the H. out circuit. The energy is stopped on the primary coil of F.B.T. when the H. output transistor Q523 is turned ON. This energy is transformed through the F.B.T. when it is turned OFF. The high voltage generated by the secondary coil is rectified 23.5 kV. This voltage is controlled by VR504. The high voltage circuit has two high voltage protection circuits to meet the D.H.H.S. standards.

The first circuit is IC401's (HA11423) internal protection circuit. If the high voltage increase, the voltage at TP2005 increase. When TP2005 voltage exceeds 0.7V, IC401's protection circuit turns ON and the H. OSC. is stopped.

The second circuit's operation is similar to the one described.

(2-3) Interface Circuit (PWE-250)

(2-3-1) Video Interface Circuit

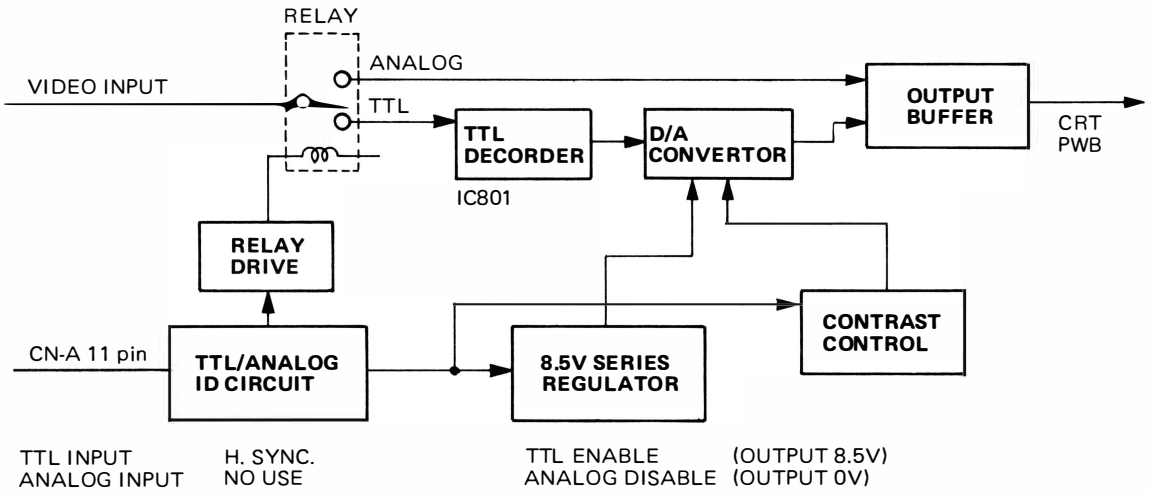

(Fig. 2-3-1) BLOCK DIAGRAM of the Video Interface

- TTL/ANALOG identification circuit

This circuit monitors the signal on pin 11 of CN-A. If there is a Horizontal pulse, the MS 3D assume that TTL Video is connected to it. The TTL/ANALOG ID output controls relays RL801 and RL802 and the 8.5V series regulator.

In case of ANALOG video input, the relays enable the ANALOG circuit and the 8.5V line, and disables the TTL enable circuit.

In case of TTL video input, the relays enable the TTL circuit, the video information is passed to the TTL decoder (IC801). This TTL decoder IC produces signals based on the MODE and color switch settings.

The maximum output of the D/A converter is 0.7 Vp-p.

The output level of the D/A converter is controlled by the CONTRAST VR only when a TTL video signal is the video source.

(2-3-2) Sync Interface Circuit

(a) The outputs of this circuit are positive H. SYNC. and V. SYNC. for the following inputs:

(i) SEPARATE SYNC POSITIVE/NEGATIVE polarity
(ii) COMPOSITE SYNC POSITIVE/NEGATIVE polarity
(iii) SYNC. ON GREEN NEGATIVE polarity

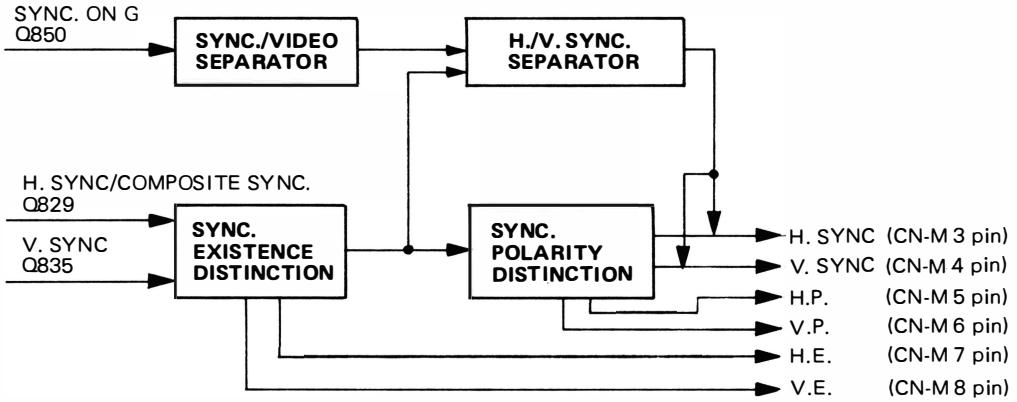

(Fig. 2-3-2) BLOCK DIAGRAM of the Sync. Interface Circuit

(i) For the separate sync. mode, the horizontal and vertical synchronization signals are supplied to the SYNC. EXISTENCE DISTINCTION and to the SYNC. POLARITY DISTINCTION circuits. The outputs after these circuits are a positive H. sync. and a negative V. sync.
(ii) For the composite sync. mode, the composite synchronization signal is applied to the H./V. SYNC SEPARATOR circuit from the SYNC. EXISTENCE DISTINCTION circuit.
(iii) For the sync. on green analog mode, the green signal is applied to the SYNC./VIDEO SEPARATOR circuit which produces a composite synchronization signal. And then, it is the same as for the composite sync. mode.

(b) The outputs of the distinction circuit are as follows:
These outputs are applied to IC151 (CPU) on the main PWB.

- TTL/ANALOG Identification signal (CN-M 5 pin) { L: ANALOG / H: TTL }
- H. SYNC. signals's polarity (CN-M 6 pin) { L: POSITIVE POLARITY / H: NEGATIVE POLARITY }
- V. SYNC. signal's polarity (CN-M 7 pin) { L: POSITIVE POLARITY / H: NEGATIVE POLARITY }
- H. SYNC. availability (CN-M 8 pin) { L: NONE / H: AVAILABLE }
- V. SYNC. availability (CN-M 9 pin) { L: NONE / H: AVAILABLE }
- Mode signal (CN-M 10 pin) { L: NORMAL / H: MDA/USER MODE }

NOTE: L . . . Low level of TTL
H . . . High level of TTL

(2-4) Video Circuit

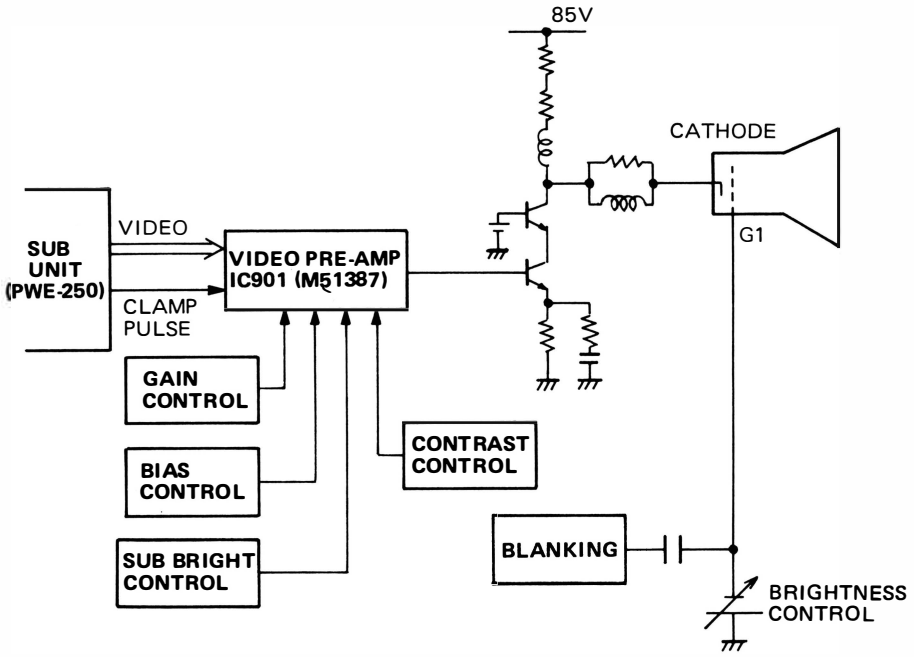

(Fig. 2-4-1) BLOCK DIAGRAM of the Video Module

The video pre-amplifier consists of the pre-amp IC901 (M51387), the gain control, the bias control circuit, the sub-brightness control circuit, and the contrast control circuit.

This pre-amplifier has two function. The first is to control the video signal output level by the gain, the contrast, and sub-brightness controls. After the gain and the contrast controls have been adjusted, the video signals output levels at the CRT cathodes are 38 Vp-p for the contrast control at the maximum position and 10 Vp-p for the contrast control at the minimum position.

For the TTL video signal mode, the contrast control and the video pre-amp gain are fixed and can not be adjusted.

The second function is the alignment of the cut-off for the CRT by the adjustment of the Bais and Sub-Brightness controls. By adjusting these controls properly, the raster color will be white for any position of the Brightness control (the Sub-Brightness control is controlled by the Brightness control).

(Fig. 2-4-2) CRT G1-Cathode Bias Condition

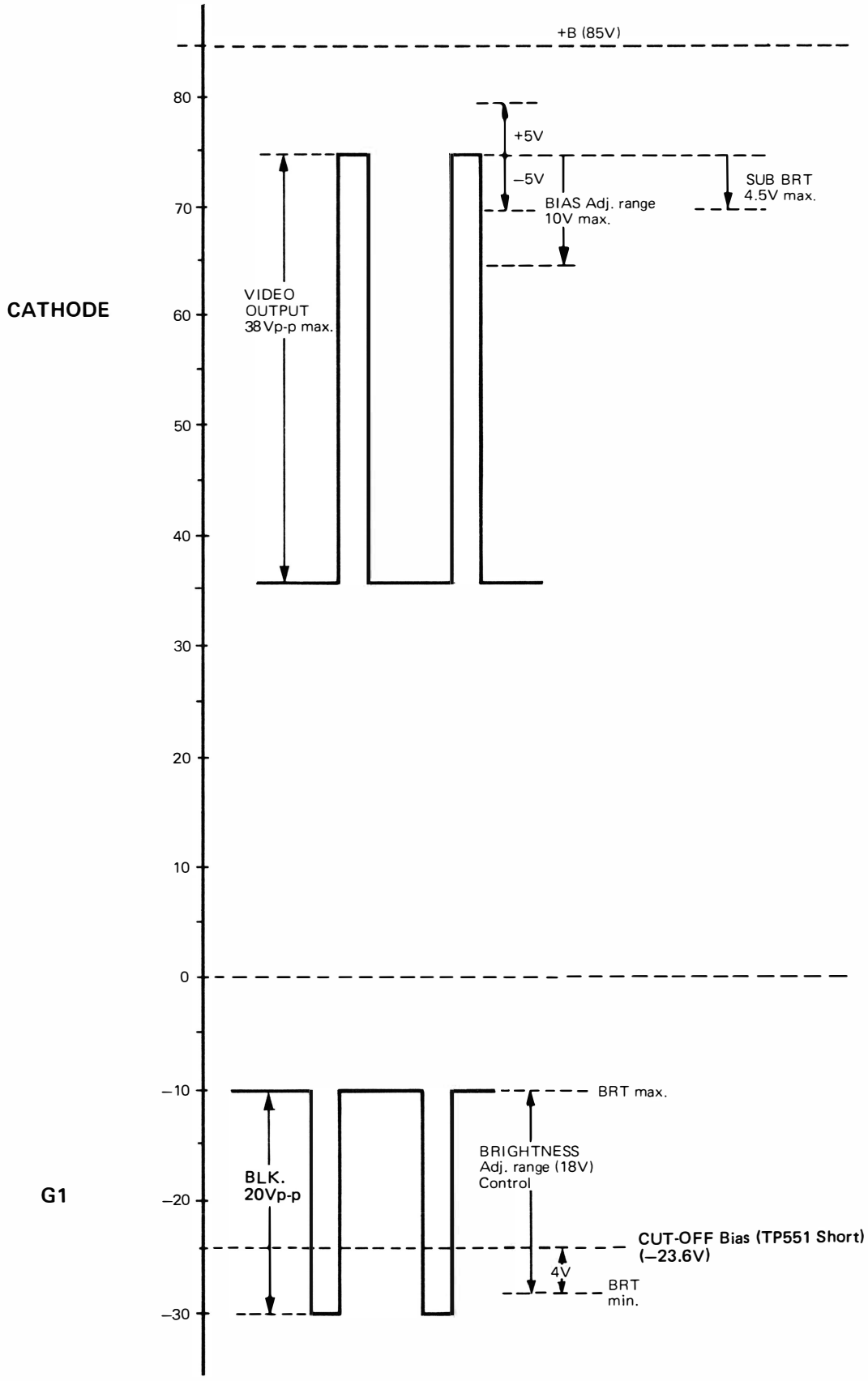

(2-5) Digital Control Circuit

(2-5-1) Digital Control Unit

Digital Control System

- Automatic Synchronization
- Management of displaying proper picture
  - Automatic signal identification
  - Automatic Sizing
  - Automatic Centering
  - Management of Picture Data
- Management of user controls
- Management of factory Adjustment

(Fig. 2-5-1) The BLOCK DIAGRAM of Digital Control System

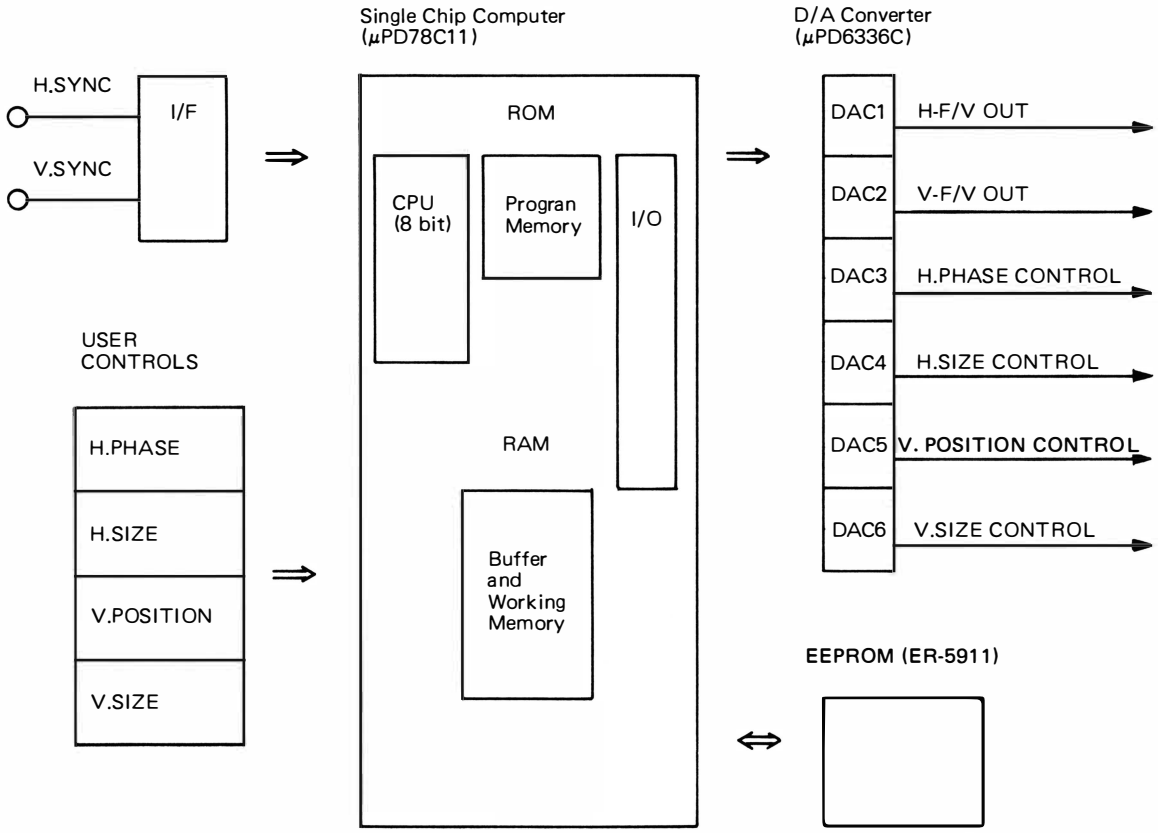

1. Automatic Synchronization

The monitor automatically synchronizes for the following frequency range.

Fh: 15.5 kHz to 38.0 kHz

Fv: 50.0 Hz to 90.0 Hz

The CPU counts the horizontal pulses during a given period of time and vertical period. After these measurements, the corresponding digital data are produced and converted by the DAC to analog voltage. This combination of the CPU and DAC produce frequency to voltage (F/V) converter. The analog voltage is used as the control signal for the automatic synchronizing circuitry.

2. Automatic Display

a. Automatic signal identification

The CPU checks the input signal (TTL or ANALOG video, separate or composite SYNC, SYNC polarity, and etc.) and automatically identifies this input signal.

*See the Fig. 2-5-2 for the Signal Identification Flowchart.

b. Automatic centering and sizing

After the CPU identifies the input signal, the CPU send the stored digital data from the corresponding memory block in the EE-PROM. The EE-PROM has several memory blocks which consist of the control data for horizontal and vertical, centering and sizing. The control data is converted to the analog voltage by the DAC and is used by control signal.

The EE-PROM data is adjusted for the several standard signals (see Fig. 2-5-4) at the factory to get the optimum video display area. When the end user connects a standard signal (i.e. VGA. EGA etc.), the monitor will display the centered active video area with suitable size automatically.

c. User controls

The user can change the control data (display size and location) by pushing the proper user control bottons. After a few seconds, the CPU will automatically store data in the EE-PROM. The user can reset the data of the memory area and recall the initial data.

In case the user has a 3rd party's compatible board, small adjustments by the user control bottons may be needed at the initial start up. This data information is again stored in the memory. No adjustments are necessary after initial start up, if the same video signal is re-used.

In case a completely different video signal is applied to the monitor, the CPU will identify the signal and select a memory block accordingly. If the display size and location are not satisfactory, the user can adjust the display and after 5 seconds the CPU will again store the control data into the memory.

d. Factory Adjustment

In order to simplify the display adjustments, the CPU has the PRESET factory data in its ROM. At the beginning of the adjustment process, the CPU writes the PRESET factory data from the ROM to the buffer RAM and then outputs them to the D/A converter. Then, the monitor is roughly adjusted for the display size and location.

The fine adjustments are then made by adjusting the user controls by the factory personnel.

*Final adjustment process for the display size and location.

1. Prepare for the adjustment mode by shorting TP151 and TP152. The CPU applies the PRESET factory data to the buffer RAM and then to the D/A converter.

2. Adjust the active video area to the center and the specified size by pushing the user control buttons changing the data of the buffer RAM.
3. Store these control data to the EE-PROM by pushing the memory recall button.

(Fig. 2-5-2) SIGNAL IDENTFICATION FLOW of the MS-III

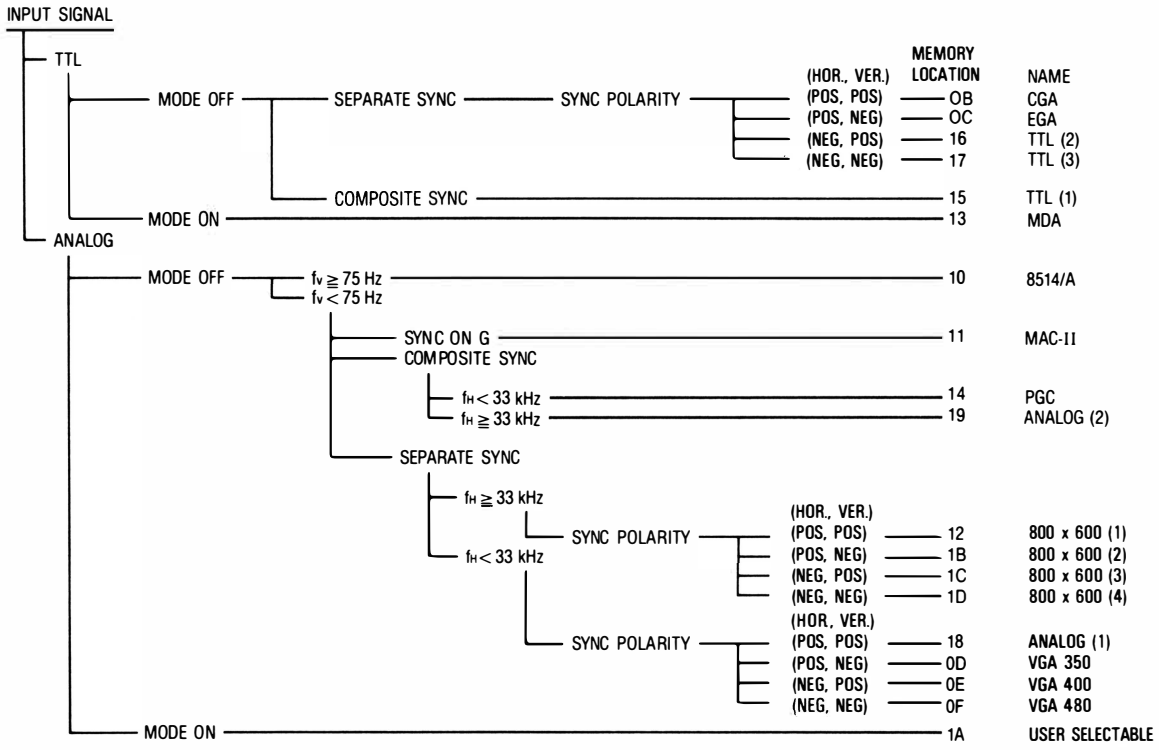

(Fig. 2-5-3) METHOD OF SIGNAL IDENTIFICATION

MEMORY LOCATION	TTL/ANALOG 0: ANALOG 1: TTL	H.S.POLARITY 0: POS 1: NEG	V.S.POLARITY 0: POS 1: NEG	H. SYNC 0: NO SYNC 1: AVAILABLE	V. SYNC 0: NO SYNC 1: AVAILABLE	MODE 0: OFF 1: ON	f_H Band Select f_V 15k 33k 38k	Band Select 40 75 100	NAME
0B	1	0	0	1	1	0	○	○	CGA
0C	1	0	1	1	1	0	○ ○	○	EGA
0D	0	0	1	1	1	0	○	○	VGA 350
0E	0	1	0	1	1	0	○	○	VGA 400
0F	0	1	1	1	1	0	○	○	VGA 480
10	0	X	X	X	X	0	X	○	8514A
11	0	X	X	0	0	0	X	○	MAC-II (ANALOG/ SYNC. ON G
12	0	0	0	1	1	0	○	○	800 x 600(1)
13	1	X	X	X	X	1	○	○	MDA
14	0	X	X	1	0	0	○	○	PGC (ANALOG CS f_H <33kHz)
15	1	X	X	1	0	0	○	○	TTL (1)
16	1	1	0	1	1	0	○	○	TTL (2)
17	1	1	1	1	1	0	○	○	TTL (3)
18	0	0	0	1	1	0	X	○	ANALOG (1)
19	0	X	X	1	0	0	○	○	ANALOG (2)
1A	0	X	X	X	X	1	○	○	USER SELECT SELECTABLE
1B	0	0	1	1	1	0	○	○	800 x 600(2)
1C	0	1	0	1	1	0	○	○	800 x 600(3)
1D	0	1	1	1	1	0	○	○	800 x 600(4)

(Fig. 2-5-4) EE-PROM MEMORY MAP

Memory type: 128 word x 8 bit (1k byte)
SERIAL EE-PROM

Address

MEMORY Block-LOCATION	NAME	H. PHASE	H. SIZE	V. POSITION	V. SIZE	
01	CGA	00	01	02	03	Factory set data for the standard SIGNALS (Back up memory data stored in the ROM) Can be changed only by the service person
02	EGA	04	05	06	07	
03	VGA 350	08	09	0A	0B	
04	VGA 400	0C	0D	0E	0F	
05	VGA 480	10	11	12	13	
06	8514A	14	15	16	17	
07	MAC-II	18	19	1A	1B	
08	800 x 600	1C	1D	1E	1F	
09	MDA	20	21	22	23	
0A	PGC	24	25	26	27	
	(INITIAL DATA)					
0B	CGA	30	31	32	33	Pre-set to the same data as memory blocks locations 01 to 0A by the factory and can be changed by user controls. These data can be reset to the initial data by using the standard data load switch. Can be changed only by the user controls
0C	EGA	34	35	36	37	
0D	VGA 350	38	39	3A	3B	
0E	VGA 400	3C	3D	3E	3F	
0F	VGA 480	40	41	42	43	
10	8514A	44	45	46	47	
11	MAC-II	48	49	4A	4B	
12	800 x 600(1)	4C	4D	4E	4F	
13	MDA	50	51	52	53	
14	PGC	54	55	56	57	
15	TTL (1)	58	59	5A	5B	
16	TTL (2)	5C	5D	5E	5F	
17	TTL (3)	60	61	62	63	
18	ANALOG (1)	64	65	66	67	
19	ANALOG (2)	68	69	6A	6B	
1A	USER SELECTABLE	6C	6D	6E	6F	
1B	800 x 600(2)	70	71	72	73	
1C	800 x 600(3)	74	75	76	77	
1D	800 x 600(4)	78	79	7A	7B	

TTL (1): TTL COMPOSITE SYNC
TTL (2): TTL H-SYNC NEGATIVE and V-SYNC POSITIVE
TTL (3): TTL H-SYNC NEGATIVE and V-SYNC NEGATIVE
ANALOG (1): f_H < 33kHz, ANALOG, H-SYNC POSITIVE, and V-SYNC POSITIVE
ANALOG (2): ANALOG COMPOSIT SYNC $f_H \leqq 33$kHz

(2-5-2) H. F/V Converter

1. BLOCK DIAGRAM

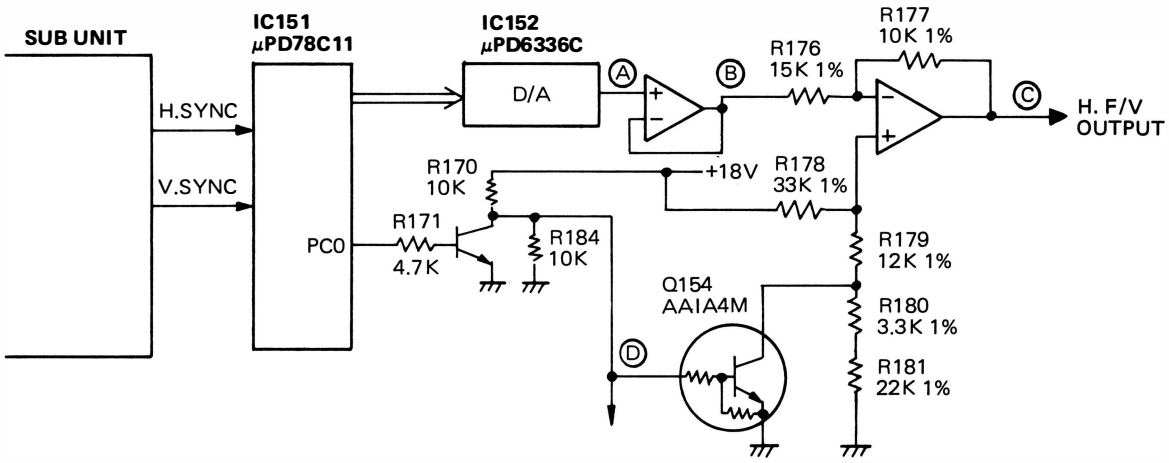

(Fig. 2-5-5) BLOCK DIAGRAM of H. F/V Converter

2. Relationship between voltage and horizontal frequency

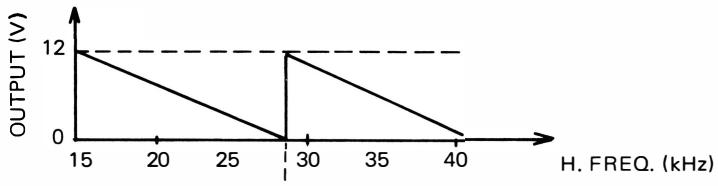

(Fig. 2-5-6) Relationship between Points Ⓐ and Ⓑ

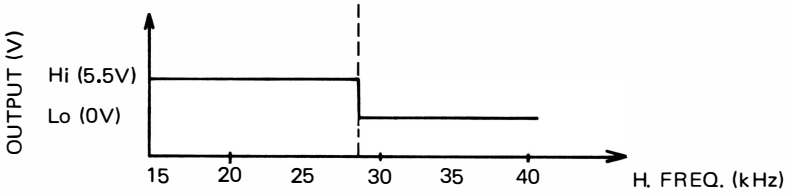

(Fig. 2-5-6) Relationship between Point Ⓓ and H. Frequency

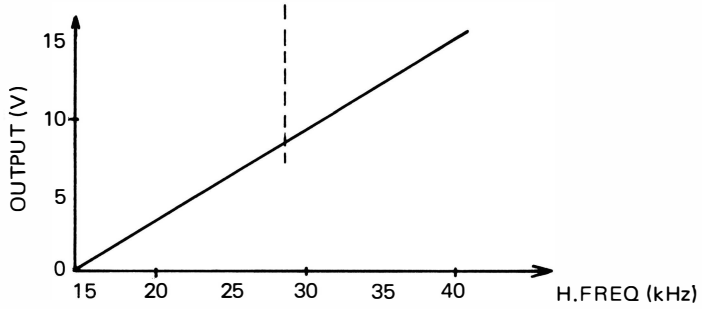

(Fig. 2-5-7) H. F/V Output (Point Ⓒ)

(2-5-3) V-F/V converter

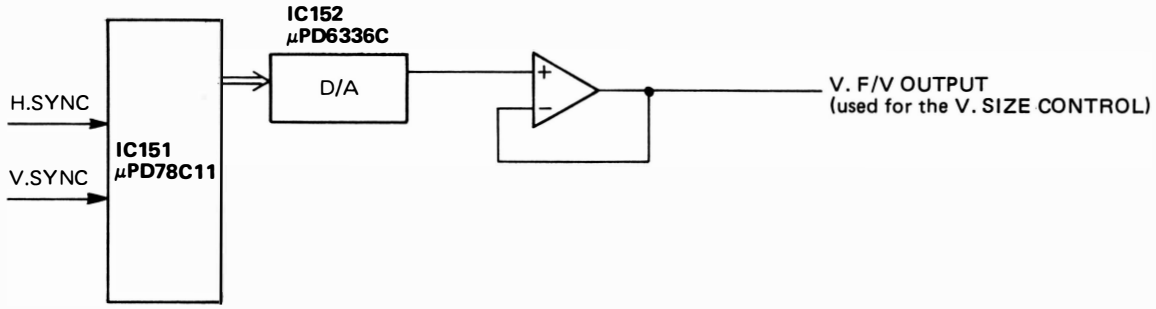

(Fig. 2-5-8) BLOCK DIAGRAM of V. F/V converter

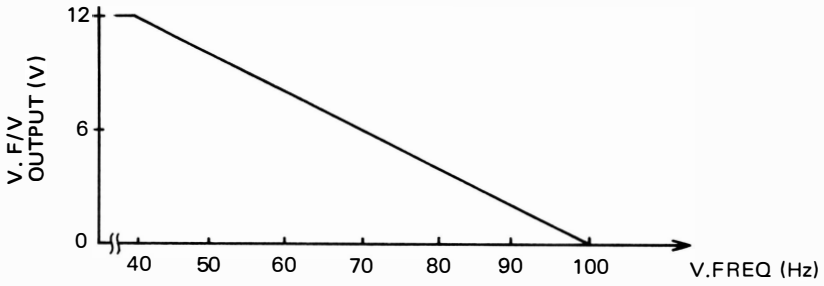

(Fig. 2-5-9) Relationship between output voltage and V. Frequency

(2-5-4) H. Phase circuit

1. BLOCK DIAGRAM

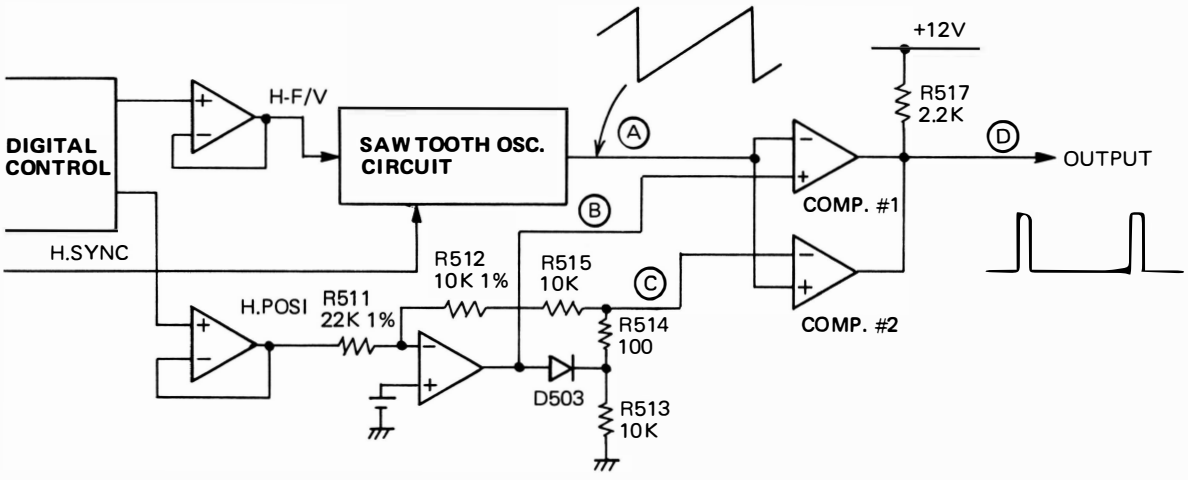

(Fig. 2-5-10) BLOCK DIAGRAM of the H. Phase Circuit

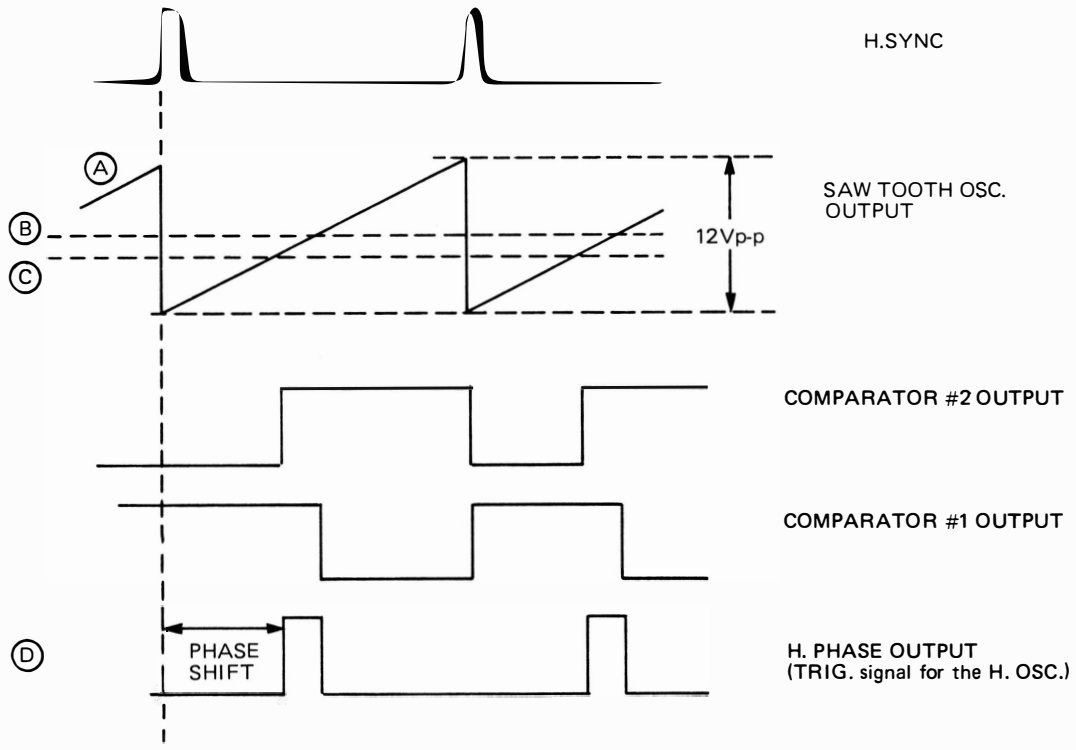

(Fig. 2-5-11) Voltage Waveform

(2-5-5) H. Size Circuit

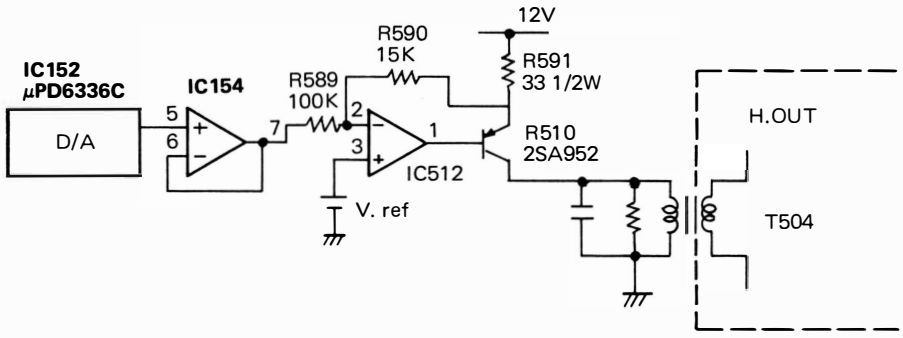

(Fig. 2-5-12) BLOCK DIAGRAM of the SIZE CIRCUIT

The H. size control voltage (IC154 pin 7) controls the DC bias level of Q510 and the primary current of T504. The primary current of T504 controls the secondary coil induction value. So, the H. size signal modulates the Horizontal D.Y current, i.e. the H. size of the raster.

(2-5-6) V. Position Circuit

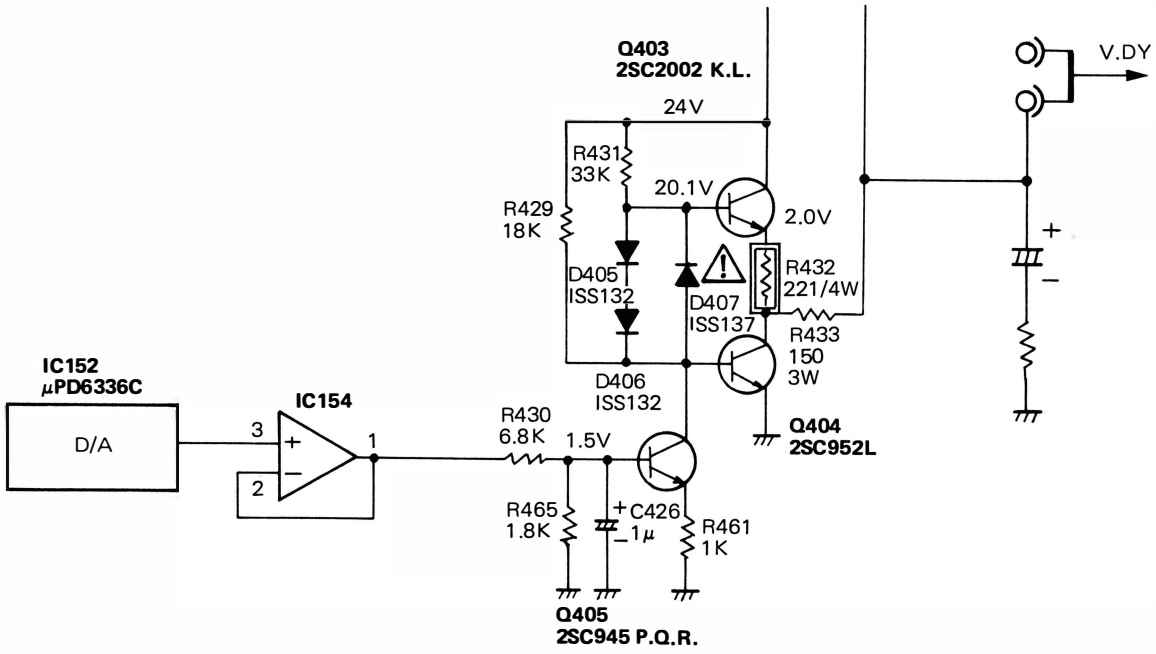

(Fig. 2-5-13) BLOCK DIAGRAM of V. POSITION CIRCUIT

The V. position control voltage (IC154 pin 1) manipulates the push-pull transistor's (Q403 and Q404) output DC level and also the V. DY DC biasing current.

(2-5-7) V. Size Circuit

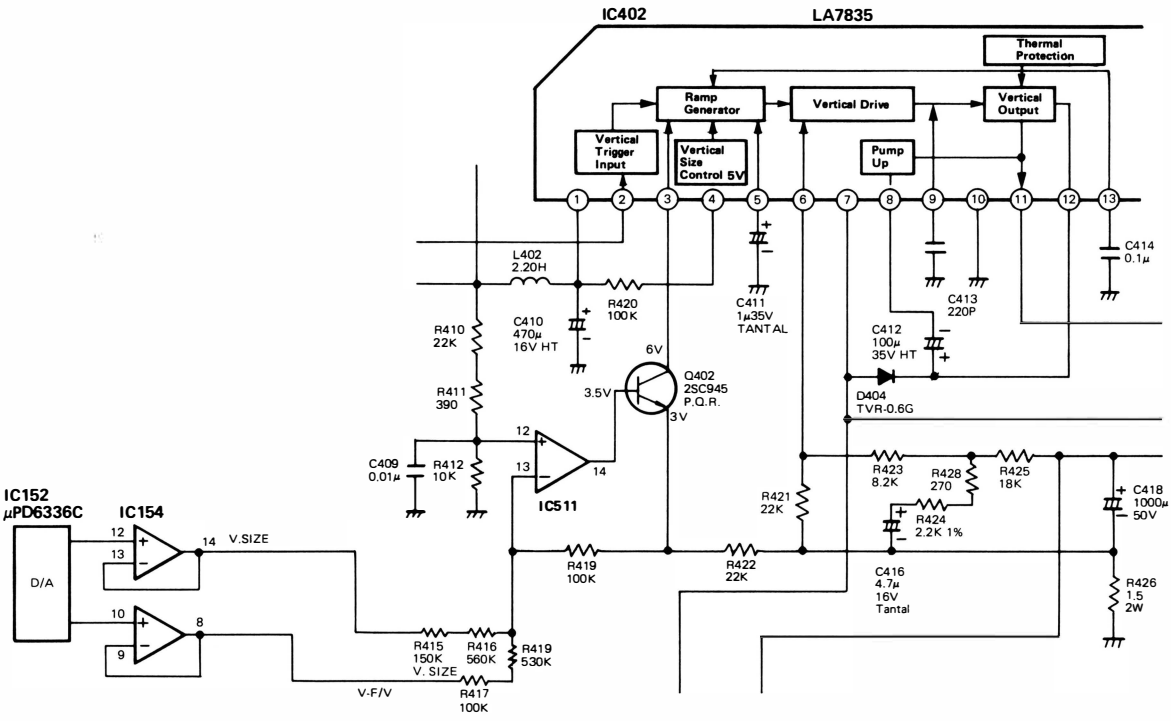

(Fig. 2-5-14) BLOCK DIAGRAM of V. SIZE CIRCUIT

The vertical raster size is controlled by the sink current of IC402 pin 3 (collecter current of Q402). Therefore, it can be controlled by changing the DC base voltage of Q402. The parameters which decide the vertical video size are the vertical frequency and the signal timing.

To keep a constant vertical raster size, the V. F/V (IC154 pin 8) output signal controls the Q402 base voltage. And, to also keep this vertical raster size constant for the pre-set signals, the V. size control voltage (IC154 pin 14) controls the base voltage of Q402.

REPLACEMENT PARTS LIST

Note: The components identified by ⚠ mark are critical for safety.
Replace only with parts Number specified.

The components specified for Model JC-1404HMA.

SYMBOL	PARTS NO	DESCRIPTION
*** CRT & TUNER ***		
⚠ CRT	33014159	CRT M34KBG23XX193
*** ICS ***		
IC156	37052179	IC SN74LS07N
IC508	37053122	MOS UPD74HC123AC
IC152	37053266	MOS UPD6336C (D/A CONVERT
IC153	37055216	EEPROM MSM16911RS E-094
IC901	37056245	IC M51387P
⚠IC651	37056273	IC UPC1093J
⚠IC401	37056408	IC HA11423DP-18
⚠IC402	37056415	IC LA7835
IC601	37056522	IC M51977P
IC155 IC157 IC502	37056583	IC LM358N
IC507 IC512		
IC101 IC501 IC510	37056584	IC LM339N
IC154 IC509 IC511	37056585	IC LM324N
IC403	37056618	IC BA6110
IC151	37056633	MOS UPD78C11G-216-36
IC801	37056421	MOS PCZ80-40
IC802	37051179	IC SN74LS123N (MONO MLT)
IC803	37051096	IC SN74LS367AN (BUFF)
IC804 IC805	37052011	IC SN74LS136N (EX-OR)
IC806	79PC0018	MOS UPD74HC04C
IC807	37053241	MOS UPD74HC86C
IC808	37053122	MOS UPD74HC123AC
*** TRANSISTORS ***		
Q151 Q152 Q153	350D7217	TR 2SC945-T Q
Q163 ⚠Q2002 Q401		
Q402 Q405 Q502		
Q503 Q504 Q506		
Q509 ⚠Q514 ⚠Q516		
Q517 Q520 Q525		
Q526 Q531 Q532		
Q533 Q537 Q902		
Q903 Q904		
Q403 Q406 Q530	350E3212	TR,2SC2002-T L
Q534 Q539	350H4417	TR,2SC1473-TA Q
Q910 Q912 Q914	350H5017	TR,2SC3811-TA Q
⚠Q2001 Q407 Q501	350K3517	TR 2SA733/2SA733A-T Q
Q505 Q507 ⚠Q515		
Q518 Q521 Q535		
Q536 Q901 Q905		
Q906 Q907 Q908		
Q960 Q961		
Q404 Q510	350K4412	TR,2SA952 L,AT
Q538	350K5217	TR,2SA1018-TA Q
Q563	35025516	TR,2SB744 P
⚠Q604	35047216	TR,2SC945 P
⚠Q601	35064211	TR 2SD571 K
Q562	35065416	TR,2SD882 P
Q527	35068112	TR 2SD986 L

SYMBOL	PARTS NO	DESCRIPTION
*** TRANSISTORS ***		
⚠Q523	35082401	TR 2SC3486-YB
Q909 Q911 Q913	35086004	TR,2SC3953-RA D
Q161 Q162 Q962	351G0501	TR,AA1A4M-T
Q154	351G0531	TR,AA1L4M-T
Q522	35121900	TR 2SK752
Q511 Q512 Q513	35122100	TR 2SK703
Q524	35122200	TR 2SK854
⚠Q603	35122210	TR 2SK829
Q519	35122500	TR 2SK758
Q508	35122600	TR 2SK701
Q806	35053212	TR, 2SC2002 L
⚠CR601	35595014	
*** DIODES ***		
D101 D102 D103	360K1027	DIODE 1SS132
D104 D105 D106		
D107 D108 D109		
D110 D111 D112		
D113 D114 D115		
D116 D117 D118		
D119 D120 D121		
D122 D123 D124		
D125 D126 D151		
D152 D155 ⚠D2003		
⚠D2004 ⚠D2005 ⚠D2006		
D401 D405 D406		
D407 D408 D409		
D410 D502 D503		
D507 D508 D510		
D511 D512 D513		
D517 D518 D520		
D521 D524 D525		
D530 D533 D564		
D901 D902 J-D153		
D526 D528 D529	360K1032	DIODE 1SS82-TA
D531 D532 D903		
D904 D905 D906	360K1032	DIODE 1SS82-TA
D907 D908		
ZD401 ZD520	360K3123	DIODE RD20EB(3)
ZD501	360K3134	DIODE RD15EB(2)-T4
⚠ZD2001 ⚠ZD2002	360K3143	DIODE,RD8.2JSB(1)-T4
⚠ZD502 ZD506 ZD512	360K3160	DIODE RD8.2EB(2)-T4
ZD511	360K3169	DIODE RD6.2EB(2)-T4
⚠ZD503 ⚠ZD504 ZD507	360K3188	DIODE RD3.9EB(2)-T4
⚠D602 ⚠D606	36001528	DIODE,1S954
⚠ZD602	36003123	DIODE,RD20EB(3)
⚠ZD657	36003147	DIODE RD18EB(1)
⚠ZD601	36003687	DIODE RD18ESB (2)
⚠ZD658	36003707	DIODE RD27ESB (4)
⚠D2001 ⚠D2002 D404	361K7160	RECTIFIER,SI. TVR-06G G23
D506 D527 D560		
D561		

SYMBOL	PARTS NO	DESCRIPTION
*** DIODES ***		
D514 D515 D516	36107160	RECTIFIER,SI. TVR-06G
⚠D603	36107174	RECTIFIER,SI. RU1P
D509	36107293	RECTIFIER,SI. RK14
⚠D651 ⚠D652	36107320	DIODE FMG-G26S
⚠D604 ⚠D605	36107322	DIODE EL1Z
D519	36107518	RECTIFIER,SI. RG2
⚠D522	36107530	DIODE RS4FS
⚠D653	36108072	D,NETWORK D5LCA20
⚠D601	36108090	D,NETWORK D5SBA60
ZD505	367K0017	DIODE RD4.7EB-T4
D550	36801023	DIODE,LIGHT-E SEL1320G
⚠TH601	38112026	THERMISTER,POSITIVE
⚠PC601 ⚠PC602	38200234	IC PC817C/D
*** TRANSFORMERS ***		
T502	45803010	TRANS,H.DRIVE
T501	46302102	TRANS FERRITE
T506	46304105	FERRITE TRANS
⚠T601	46310109	TRANS,SWITCHING
⚠T505	47105649	F.B.T.
⚠T503	47502060	TRANS
*** VARIABLE RESISTORS ***		
VR101 VR102	41011211	R,VARIABLE B10K-V
VR904	41071160	R,VARIABLE B3.3K
VR901 VR902 VR903	41071161	R,VARIABLE B4.7K
VR906 VR908 VR910		
VR905 VR907 VR909	41071165	R,VARIABLE B22K
VR505	41085006	R,VARIABLE B2K
VR501 VR502	41085009	R,VARIABLE B10K
VR503	41085010	R,VARIABLE B20K
VR402	41085059	R,VARIABLE B10K
⚠VR651	41505003	R,VARIABLE B500
⚠VR2001 ⚠VR2002 ⚠VR504	41505005	R,VARIABLE B2K
*** RELAYS & SWITCHES ***		
SW110	65161045	SWITCH,SLIDE
SW111	65161046	SWITCH,SLIDE
	65260002	SWITCH,SEE-SAW
SW101 SW102 SW103	65360016	SWITCH,PUSH BUTTON
SW104 SW105 SW106		
SW107 SW108 SW109		
RL101	65699009	RELAY SY5(1T)
RL801	65602551	RELAY G5A-237P
RL802	65699012	RELAY RY12W (2T)
*** COILS & FILTERS ***		
LC901	390J9015	FILTER ZJSC-2R2-101TA
⚠T504	60906202	WIDTH CHOKE
⚠L503	60908058	WIDTH COIL
⚠L504	60918108	COIL,H.LIN
L902 L904 L906	610E1707	COIL,FILTER
L151 L907	610E1714	COIL,FILTER 5.6UH

SYMBOL	PARTS NO	DESCRIPTION
*** COILS & FILTERS ***		
L901 L903 L905	610E1717	COIL,FILTER 10UHA,T (S)
L152	610E1719	COIL,FILTER 15UH
L508	610F7514	COIL,FILTER 5.6UH
⚠FL601 ⚠FL602	61062043	LINE FILTER
	61062075	POWER LINE FILTER
L502	61064006	COIL,FILTER 50UH
L401 L402	61064051	COIL,FILTER 2200UH
⚠L602	61065002	FERRITE BEADS
L507	61067005	COIL,FILTER 1.0UH
L506	61070127	FILTER CHOKC
L505	61070128	COIL,CHOKE
⚠L651	61099011	COIL,CHOKE 33UH
⚠L653	61099014	COIL,CHOKE 33UH
L501	61099019	COIL,CHOKE
⚠L652	61099023	FILTER,CHOKE
⚠L601	61099044	SHIELDING COIL 222K
L801 L802	61051709	COIL, FILTER L2R2KBS
DEG	61314418	COIL,DEGAUSSING
LC902	61606022	NOIZE FILTER DSS-222M
*** PWB ASSYS ***		
	84K71A01	SW.REG.PWB ASSY
	84K71C01	VIDEO CRT PWB ASSY
	84K71D03	MAIN PWB ASSY
	79100002	SUB PWB UNIT
*** ELECTRICAL PARTS & MISCELLANEOUS PARTS ***		
HS3	31709103	INSULATOR
HS402	31709202	SHEET,INSULATOR
HS523	31709503	SHEET,INSULATOR
HS1	31709610	SHEET,INSULATOR
SG901 SG902 SG903	32990047	ARRESTER
SG904		
X151	64098029	X'TAL 12.000MHZ
⚠F601	66653017	FUSE 125V 4A-UC
SG905	66706001	SPARK GAP 1.2KV
⚠	70032026	SG/CRT SOCKET
	70810738	LINE CORD 3P L=1.8 J
	71205037	HOLDER,FUSE
CN-RH CN-RH1 CN-RH2	73721003	CONNECTOR PIN 2P
CN-RH3		
CN-L	73729006	POST 2P
	73893056	CABLE,SIGNAL
	70599111	ADAPTER
	70599125	ADAPTER
*** APPEARANCE PARTS ***		
	24514792	COIL SPRING
	25309961	CABINET BOTTOM ASSY
	25309981	CABINET FRONT ASSY
	25310461	CABINET BACK ASSY
	25409731	REVOLVING STAND ASSY
	25409751	SPINDLE
	25768521	NAME PLATE,INSTRUCTION

SYMBOL	PARTS NO	DESCRIPTION
*** KNOBS & PUSH BUTTONS ***		
	25452771	KNOB,CONTROL
	25452791	KNOB,SLIDE
	25452911	KNOB(A),SLIDE
	25452921	PUSH BUTTON
*** RESISTORS ***		
⚠R604 ⚠R612 ⚠R614	401C6625	R,CARBON 10H 5% 1/4W
⚠R602	401C6673	R,CARBON 1.0K 5% 1/4W
⚠R618	401C6697	R,CARBON 10K 5% 1/4W
⚠R660	401C6701	R,CARBON 15K 5% 1/4W
⚠R663	401K5649	R,CARBON 100H 5% 1/6W
⚠R659	401K5665	R,CARBON 470H 5% 1/6W
⚠R583	401K5667	R,CARBON 560H 5% 1/6W
⚠R582	401K5673	R,CARBON 1.0K 5% 1/6W
⚠R655 ⚠R656 ⚠R658	401K5677	R,CARBON 1.5K 5% 1/6W
⚠R605	401K5681	R,CARBON 2.2K 5% 1/6W
⚠R2004 ⚠R2006	401K5685	R,CARBON 3.3K 5% 1/6W
⚠R5B1 ⚠R5B2	401K5687	R,CARBON 3.9K 5% 1/6W
⚠R620 ⚠R665	401K5689	R,CARBON 4.7K 5% 1/6W
⚠R2003 ⚠R2005 ⚠R581	401K5695	R,CARBON 8.2K 5% 1/6W
⚠R2007 ⚠R2010	401K5697	R,CARBON 10K 5% 1/6W
⚠R584 ⚠R609 ⚠R623		
⚠R579	401K5699	R,CARBON 12K 5% 1/6W
⚠R621 ⚠R625	401K5701	R,CARBON 15K 5% 1/6W
⚠R580 ⚠R619	401K5705	R,CARBON 22K 5% 1/6W
⚠R626	401K5707	R,CARBON 27K 5% 1/6W
⚠R622	401K5709	R,CARBON 33K 5% 1/6W
⚠R2008	401K5711	R,CARBON 39K 5% 1/6W
⚠R615	401K5721	R,CARBON 100K 5% 1/6W
⚠R616	40175125	R,CARBON 10H 5% 1/4W
⚠R617	40175129	R,CARBON 15H 5% 1/4W
⚠R432	40175133	R,CARBON 22H 5% 1/4W
⚠R525 ⚠R592	40178166	R,CARBON 510H 5% 1/2W
⚠R521	40178177	R,CARBON 1.5K 5% 1/2W
⚠R601	40299104	R,WIRE 10H 5% 5W
R5E0	40371135	R,METAL 27H 5% 1W
R5E1	40371143	R,METAL 56H 5% 1W
R188	40371161	R,METAL 330H 5% 1W
⚠R610 ⚠R611	40371329	R,METAL 0.22H 5% 1W
R426	40372105	R,METAL 1.5H 5% 2W
⚠R654 ⚠R666	40372133	R,METAL 22H 5% 2W
⚠R651	40372137	R,METAL 33H 5% 2W
R555	40372169	R,METAL 680H 5% 2W

SYMBOL	PARTS NO	DESCRIPTION
*** RESISTORS ***		
R567	40373123	R,METAL 8.2H 5% 3W
⚠R624	40373145	R,METAL 68H 5% 3W
⚠R606	40373149	R,METAL 100H 5% 3W
R433	40373153	R,METAL 150H 5% 3W
R947 R950 R953	40373165	R,METAL 470H 5% 3W
R5B7 R948 R951 R954	40373167	R,METAL 560H 5% 3W
R5B6	40373169	R,METAL 680H 5% 3W
⚠R667	40373173	R,METAL 1.0K 5% 3W
⚠R657	40373197	R,METAL 10K 5% 3W
⚠R603 ⚠R607 ⚠R668	40373213	R,METAL 47K 3W 5%
⚠R662	404C1683	R,METAL 2.7K 1% 1/6W
⚠R562	404C1711	R,METAL 39K 1% 1/6W
⚠R661	404C1719	R,METAL 82K 1% 1/6W
⚠R2001 ⚠R2002 ⚠R5C2 ⚠R5D1 ⚠R553 ⚠R568 ⚠R627	40405109	R,METAL 2.2H 5% 1/4W
⚠R536	40405137	R,METAL 33H 5% 1/4W
⚠R520	40405149	R,METAL 100H 5% 1/4W
*** CAPACITORS ***		
C559 C570	420C9551	C,CERAMIC 500V 100PF
C577	420C9557	C,CERAMIC 500V 330PF
C547 C591	420C9560	C,CERAMIC 500V 560PF
C560	420C9563	C,CERAMIC 500V 0.001UF
C571	420C9567	C,CERAMIC 500V 2200PF
C404 C414 C420	420J9069	C,CERAMIC 50V 0.1UF
C933	42019175	C,CERAMIC 2KV 0.01UF
C927 C929 C931	4203J571	C,CERAMIC 500V 4700PF
⚠C603 ⚠C604 ⚠C610	42053013	C,CERAMIC 400V 1000PF
⚠C662	42099086	C,CERAMIC 2KV 1000PF
⚠C608 ⚠C651 ⚠C655	42099088	C,CERAMIC 2KV 220PF
⚠C621 ⚠C622	42099096	C,CERAMIC 2000V 470PF
C101 C153 C154	421A0425	C,CERAMIC 50V 0.01UF
C155 C156 C157		
C158 C164 C169		
C171 C172 C173		
C174 C175 C176		
C177 C178 C179		
C180 C181 C406		
C409 C425 C430		
C543 C553 C567		
C568 C569 C573		
C574 C575 C579		
C580 C581 C585		
C908 C909 C910		
C911 C935 C936		
C501	421C0208	C,CERAMIC 50V 390PF
C152 C554	421C0213	C,CERAMIC 50V 1000PF
C592	421C0217	C,CERAMIC 50V 0.0022UF
C543	421C0225	C,CERAMIC 50V 0.01UF
⚠C528	421C0701	C,CERAMIC 50V 100PF
C160 C557 C572	421J9001	C,CERAMIC 50V 0.1UF
C904 C907 C916		
C917 C918 C919		
C920 C922 C925		

SYMBOL	PARTS NO	DESCRIPTION
*** CAPACITORS ***		
C934		
C162 C163	423A1015	C,CERAMIC 50V 10PF
C151 C403	423A1045	C,CERAMIC 50V 100PF
C583 C921 C923	423A1047	C,CERAMIC 50V 120PF
C926		
C413	423A1053	C,CERAMIC 50V 220PF
C185	423A2005	C,CERAMIC 50V 5PF
C502 C513	427A7005	C,FILM 100V 0.0022UF
C506 C507 ⚠C529	427F4001	C,FILM 50V 1000PF
C584		
C530	427F4010	C,FILM 50V 5600PF
C524 C538	427F4013	C,FILM 50V 0.01UF
C417	427F4017	C,FILM 50V 0.022UF
C186	427F4020	C,FILM 50V 0.039UF
C539 C541	427F4025	C,FILM 50V 0.1UF
C523	427F4051	C,FILM 50V 1000PF
C514	427F4058	C,FILM 50V 3900PF
C508	427F4059	C,FILM 50V 4700PF
C402	427F4061	C,FILM 50V 6800PF
C624	427F4063	C,FILM 50V 0.01UF
C510	427F4065	C,FILM 50V 0.015UF
C509 C516	427F4071	C,FILM 50V 0.047UF
⚠C551	42703863	C,MYLAR 400V 0.01UF
⚠C552	42703865	C,FILM 400V 0.015UF
C562	42754163	C,FILM 100V 0.01UF
C555	42754207	C,FILM 200V 0.01UF
C544	42754267	C,FILM 200V 0.022UF
C548	42754470	C,FILM 400V 0.039UF
C548	4276D320	C,MYLAR 400V 0.039UF
⚠C549	42807519	C,METAL FILM 1.6K 5600PF
⚠C550	42808509	C,METAL FILM 1.6KV 2200PF
⚠C660	4282C010	C,METAL 50V 0.056UF
⚠C616	4282C011	C,FILM 50V 0.068UF
⚠C605 ⚠C614 ⚠C618	4282C013	C,ELEC 50V 0.1UF
C401	4282C025	C,METAL FILM 50V 1UF
⚠C601	42824325	C,FILM 250V 0.1UF
⚠C602	42824329	C,FILM 250V 0.22UF
⚠C609	42839022	C,METAL FILM 250V 0.1UF
⚠C658 ⚠C659	42840084	C,METAL 250V 0.018UF
⚠C617	42842004	C,METAL 50V 390PF
⚠C532	42843003	C,FILM 400V 0.12UF
⚠C534	42899015	C,METAL FILM 400V 0.47UF
⚠C535	42899031	C,METAL FILM 400V 0.39UF
⚠C533	42899041	C,METAL FILM 200V 0.82UF
⚠C2002	430B3091	C ELEC 35V 220UF
C928 C930 C932	430B3182	C,ELEC 160V 1UF
C565	430B3187	C,ELEC 160V 22UF
C419	430B5107	C,ELEC 50V 22UF
⚠C2003 ⚠C2004	430B6015	C,ELEC 10V 47UF
⚠C526	430B6039	C,ELEC 25V 22UF
C426 C520 ⚠C527	430B6061	C,ELEC 50V 1UF
C542 C546	430B6062	C,ELEC 50V 2.2UF
C540	430B6066	C,ELEC 50V 22UF

SYMBOL	PARTS NO	DESCRIPTION
*** CAPACITORS ***		
C556 C558	430B6068	C,ELEC 50V 47UF
⚠ C2001	430B9053	C,ELEC 35V 47UF
C593	430B9061	C,ELEC 50V 1UF
C913 C914 C915	430B9062	C,ELEC 50V 2.2UF
C536	430B9556	C,ELEC 250V 10UF
⚠ C664	4302J053	C,ELEC 35V 47UF
⚠ C663	4302J058	C,ELEC 35V 1000UF
⚠ C615	4302J064	C,ELEC 50V 4.7UF
⚠ C611 ⚠C619	4302J065	C,ELEC 50V 10UF
⚠ C612	4302J066	C,ELEC 50V 22UF
⚠ C657	4302J102	C,ELEC 100V 100UF
⚠ C656	4302J103	C,ELEC 100V 220UF
C594	4302J516	C,ELEC 160V 10UF
⚠ C654	4302J559	C,ELEC 250V 47UF
⚠ C653	4302J560	C,ELEC 250V 100UF
C418	43026073	C,ELEC 50V 1000UF
C537	43041013	C,ELEC 160V 100UF
⚠ C606	43109042	C,ELEC 200V 820UF
*** PRINTED & PACKING MATERIALS ***		
	24806961	BAG,POLYETHYLENE(270*370)
	24813191	BAG,POLYETHYLENE(150*370)
	25603711	FOOT,RUBBER
	25605881	FOOT(A),RUBBER
	25804551	BAG,POLYETHYLENE(150*230)
	25804991	BAG,POLYETHYLENE (85*110)
	25816851	CARTON BOX
	78047501	SERVICE CONTRACT
	78121601	INSTRUCTION BOOK
	2E816341	FILLER(T),CARTON
	2E816351	FILLER(B),CARTON
	24M02911	BAG,POLYETHYLENE (DHHS)
	78034294	MONITOR QUESTIONARE
	78034401	MONITOR SALES OFFICE LIST
	59990282	S/M JC-1404HMA

RUN NO.1

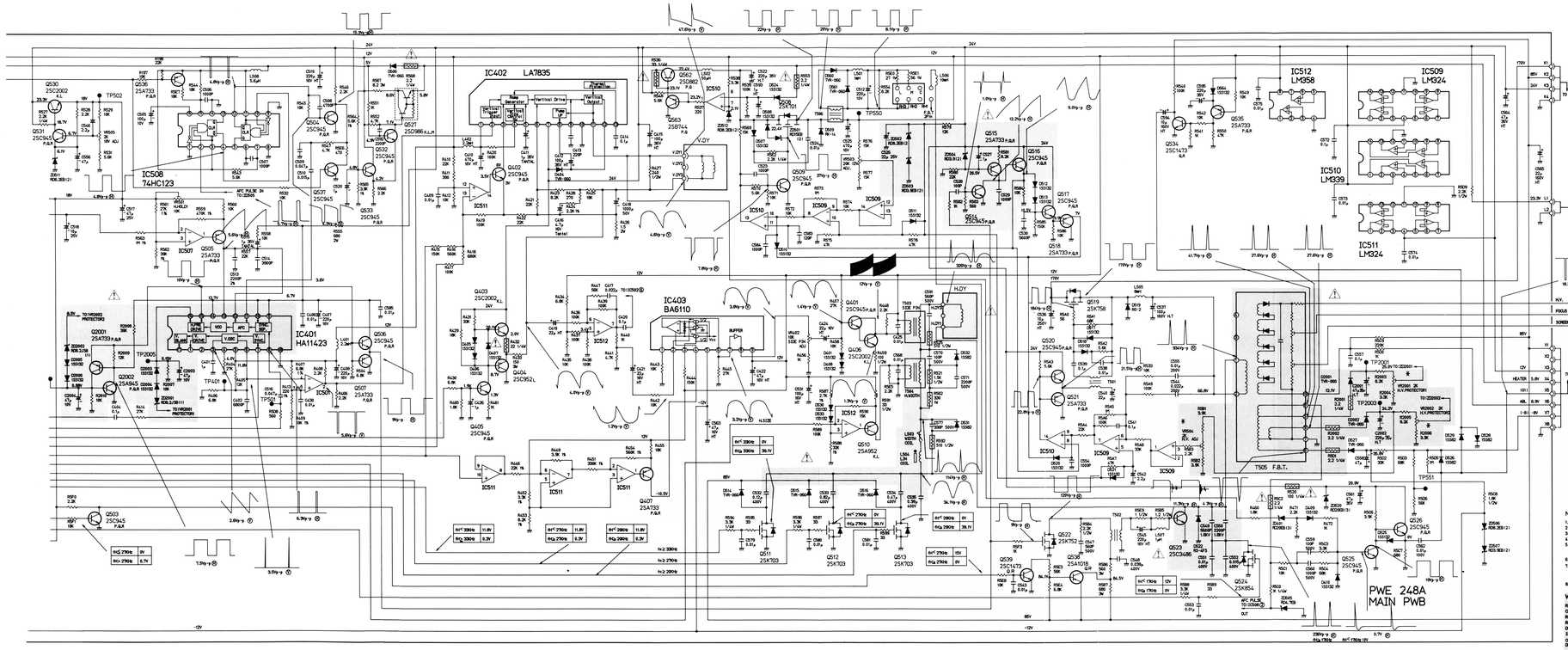

PD0 (CS0)	PD1 (CS1)	PD2 (CS2)	
L	L	L	——
L	L	H	BRIGHT
L	H	L	CONT
L	H	H	H.POSI
H	L	L	H.SIZE
H	L	H	V.POSI
H	H	L	V.SIZE
H	H	H	DISABLE

PD3	PD4	
H	L	UP
L	H	DOWN
H	H	DISABLE

PD6	PD7	
L	L	USER CONTROL MODE
L	H	FACTORY ADJ. MODE
H	L	DATA LOAD
H	H	FACTORY DATA WRITING

PA2 (TV/ANALOG)	PA3 (HP)	PA4 (VP)	PA5 (HE)	PA6 (VE)	PA7 (MODE)	FH	Fv	
H	L	L	H	H	L	——	0	CGA
H	L	H	H	H	L	——	0	EGA
L	L	L	H	H	L	(1)	0	VGA 350
L	L	H	H	H	L	(1)	0	VGA 400
L	H	H	H	H	L	(1)	0	VGA 480
L	——	——	——	——	L	——	1	8514A
L	L	L	H	H	L	(1)	0	MAC II
H	——	——	——	——	H	——	0	MDA
L	——	——	H	L	L	(1)	0	PGC
H	——	——	H	L	L	——	0	TTL C.S.
H	H	L	H	H	L	——	0	TTL N.P.
H	H	H	H	H	L	——	0	TTL N.N.
L	L	L	H	H	L	(1)	0	ANALOG(1) PP
L	——	——	H	L	L	(1)	0	ANALOG(2) CS
L	——	——	——	——	H	——	0	USER
L	L	H	H	H	L	(1)	0	800 × 600(2)
L	H	L	H	H	L	(1)	0	800 × 600(3)
L	H	H	H	H	L	(1)	0	800 × 600(4)

NOTES
1. RESISTOR VALUES ARE IN Ω (OHM) K = 1,000Ω M = 1,000,000Ω
2. ALL RESISTORS ARE 1/4WATT EXCEPT WHERE OTHERWISE INDICATED.
3. CAPACITOR VALUES ARE IN μF UNLESS OTHERWISE INDICATED. P = PF
4. ALL CAPACITORS ARE 50VOLTS EXCEPT WHERE OTHERWISE INDICATED.
5. VOLTAGES AND WAVEFORMS ARE MEASURED WITH ALL CONTROLS IN THE CONDITIONS OF CROSSHATCH AND MECHANICAL CONTROLS ARE MAXIMUM AND ALL OTHER CONTROLS ARE NORMAL OPERATION.
6. ⟵ HORIZONTAL RATE. ⟵ VERTICAL RATE.
7. VOLTAGES AND WAVEFORMS ARE MEASURED UNDER THE FOLLOWING SYNC. AND VIDEO. EXCEPT WHERE OTHERWISE INDICATED.
SYNC: HORIZONTAL RATE, 22KHz SEPARATE SYNC, TTL LEVEL POSITIVE
VIDEO: LEVEL POSITIVE ALL INVERTED "L" PATTERN
8. LITE: LOW LEVEL
HITTL: HIGH LEVEL
9. (1) Fv ≤ 83KHz
(2) Fv ≤ 33KHz
10. Fv 0: Fv≦ 75Hz
1: Fv > 75Hz

WARNING
REPLACEMENT PARTS WHICH HAVE SPECIAL SAFETY CHARACTERISTICS ARE IDENTIFIED BY ⚠ SHADING ON THE SCHEMATICS. REPLACE THESE CRITICAL COMPONENTS WITH RECOMMENDED REPLACEMENT PARTS.
DO NOT DEGRADE THE SAFETY OF THE SET THROUGH OVERHEATING, MODIFICATION, ETC.
CAUTION: ICs ARE PRESSED IN TO PERMANENTLY FIXED. DO NOT ATTEMPT TO REMOVE OR IMPROPERLY REPLACE.

RUN NO.1

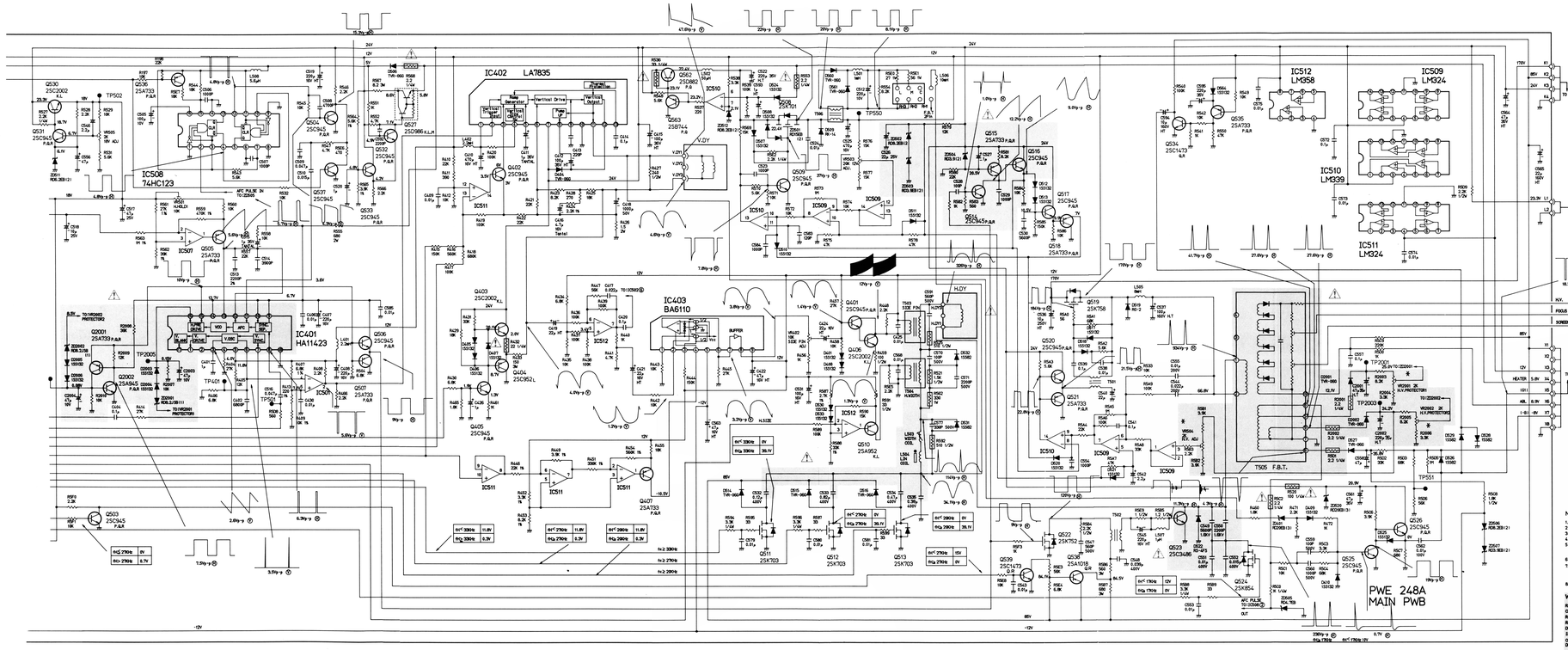

PD0 (CS0)	PD1 (CS1)	PD2 (CS2)	
L	L	L	——
L	L	H	BRIGHT
L	H	L	CONT
L	H	H	H.POSI
H	L	L	H.SIZE
H	L	H	V.POSI
H	H	L	V.SIZE
H	H	H	DISABLE

PD3	PD4	
H	L	UP
L	H	DOWN
H	H	DISABLE

PD6	PD7	
L	L	USER CONTROL MODE
L	H	FACTORY ADJ. MODE
H	L	DATA LOAD
H	H	FACTORY DATA WRITING

PA2 (TV/ANALOG)	PA3 (HP)	PA4 (VP)	PA5 (HE)	PA6 (VE)	PA7 (MODE)	FH	Fv	
H	L	L	H	H	L	——	0	CGA
H	L	H	H	H	L	——	0	EGA
L	L	L	H	H	L	(1)	0	VGA 350
L	L	H	H	H	L	(1)	0	VGA 400
L	H	H	H	H	L	(1)	0	VGA 480
L	——	——	——	——	L	——	1	8514A
L	L	L	H	H	L	(1)	0	MAC II
H	——	——	——	——	H	——	0	MDA
L	——	——	H	L	L	(1)	0	PGC
H	——	——	H	L	L	——	0	TTL C.S.
H	H	L	H	H	L	——	0	TTL N.P.
H	H	H	H	H	L	——	0	TTL N.N.
L	L	L	H	H	L	(1)	0	ANALOG(1) PP
L	——	——	H	L	L	(1)	0	ANALOG(2) CS
L	——	——	——	——	H	——	0	USER
L	L	H	H	H	L	(1)	0	800 × 600(2)
L	H	L	H	H	L	(1)	0	800 × 600(3)
L	H	H	H	H	L	(1)	0	800 × 600(4)

NOTES
1. RESISTOR VALUES ARE IN Ω (OHM) K = 1,000Ω M = 1,000,000Ω
2. ALL RESISTORS ARE 1/4WATT EXCEPT WHERE OTHERWISE INDICATED.
3. CAPACITOR VALUES ARE IN μF UNLESS OTHERWISE INDICATED. P = PF
4. ALL CAPACITORS ARE 50VOLTS EXCEPT WHERE OTHERWISE INDICATED.
5. VOLTAGES AND WAVEFORMS ARE MEASURED WITH ALL CONTROLS IN THE CONDITIONS OF CROSSHATCH AND MECHANICAL CONTROLS ARE MAXIMUM AND ALL OTHER CONTROLS ARE NORMAL OPERATION.
6. ⟵ HORIZONTAL RATE. ⟵ VERTICAL RATE.
7. VOLTAGES AND WAVEFORMS ARE MEASURED UNDER THE FOLLOWING SYNC. AND VIDEO. EXCEPT WHERE OTHERWISE INDICATED.
SYNC: HORIZONTAL RATE, 22KHz SEPARATE SYNC, TTL LEVEL POSITIVE
VIDEO: LEVEL POSITIVE ALL INVERTED "L" PATTERN
8. LITE: LOW LEVEL
HITTL: HIGH LEVEL
9. (1) Fv ≤ 83KHz
(2) Fv ≤ 33KHz
10. Fv 0: Fv≦ 75Hz
1: Fv > 75Hz

WARNING
REPLACEMENT PARTS WHICH HAVE SPECIAL SAFETY CHARACTERISTICS ARE IDENTIFIED BY ⚠ SHADING ON THE SCHEMATICS. REPLACE THESE CRITICAL COMPONENTS WITH RECOMMENDED REPLACEMENT PARTS.
DO NOT DEGRADE THE SAFETY OF THE SET THROUGH OVERHEATING, MODIFICATION, ETC.
CAUTION: ICs ARE PRESSED IN TO PERMANENTLY FIXED. DO NOT ATTEMPT TO REMOVE OR IMPROPERLY REPLACE.

NEC JC-1404HMA

SCHEMATIC DIAGRAM 2

RUN NO.1

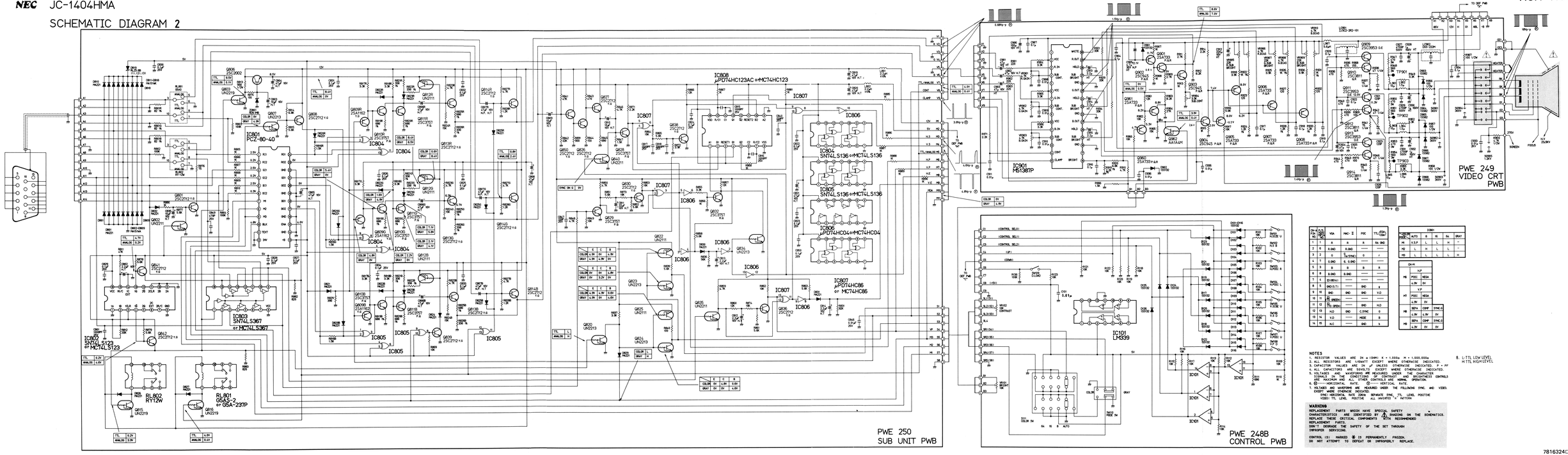

7816324□

NEC JC-1404HMA

SCHEMATIC DIAGRAM 2

RUN NO.1

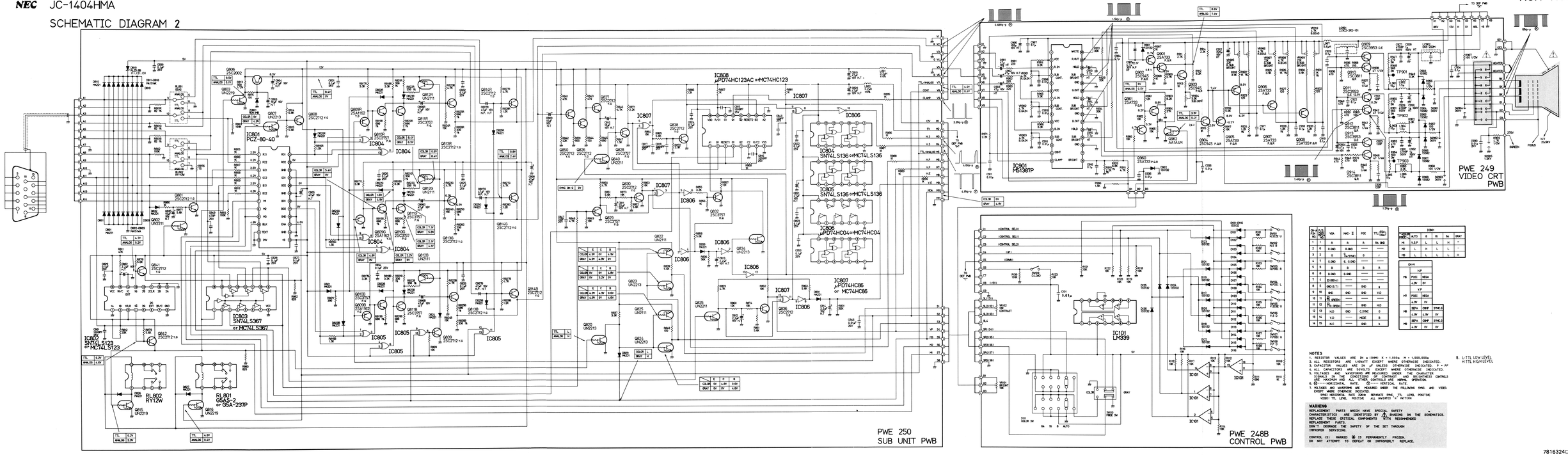

7816324□

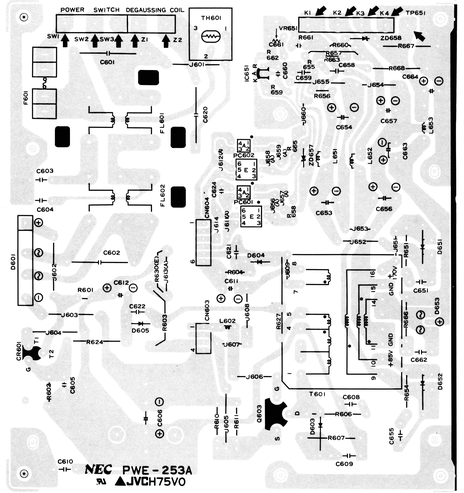

SW. REG. PWB ASSY (PWB-253)
—Solder side—

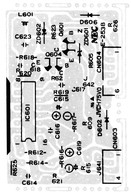

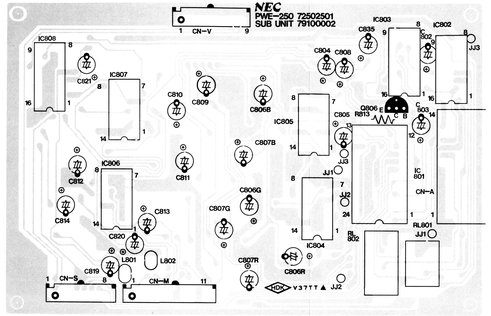

SUB PWB ASSY (PWE-250)
—Solder side—

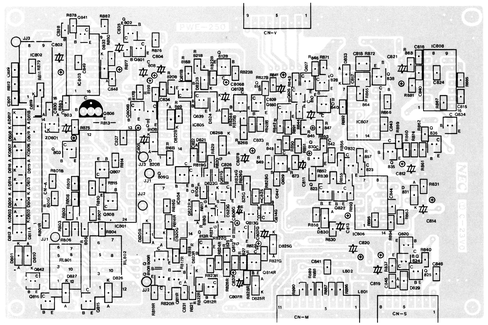

SUB PWB ASSY (PWE-250)
—Component side—

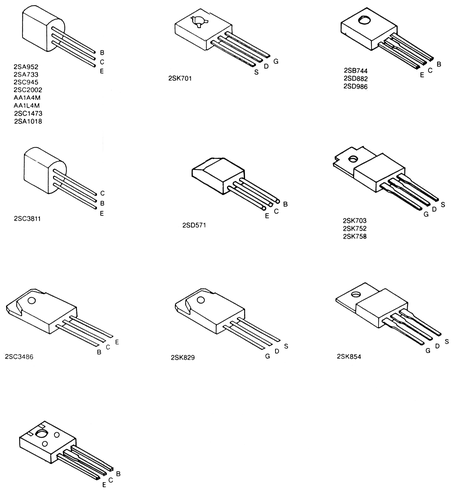

NOTE:
E: EMITTER
B: BASE
C: COLLECTOR
G: GATE
D: DRAIN
S: SOURCE

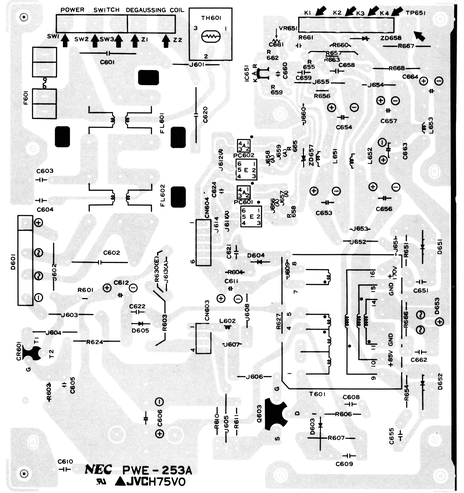

SW. REG. PWB ASSY (PWB-253)
—Solder side—

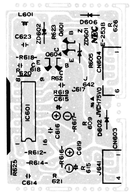

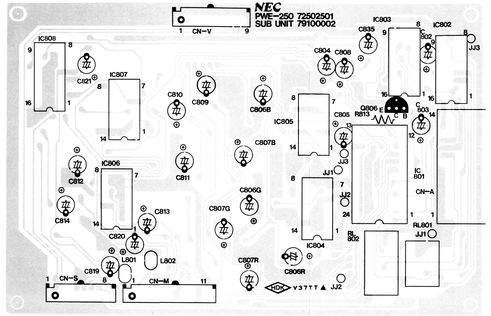

SUB PWB ASSY (PWE-250)
—Solder side—

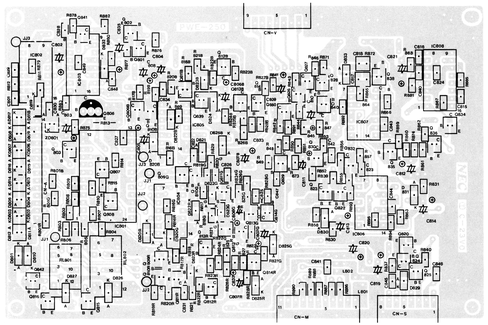

SUB PWB ASSY (PWE-250)
—Component side—

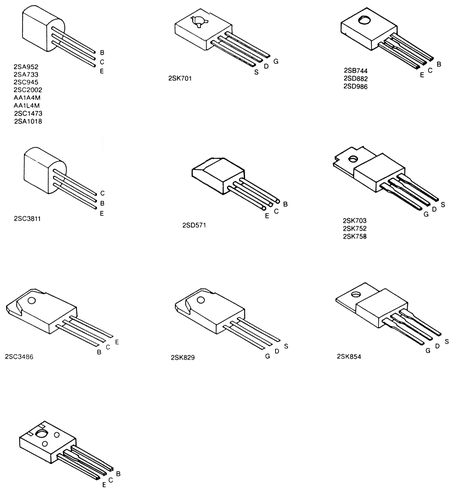

NOTE:
E: EMITTER
B: BASE
C: COLLECTOR
G: GATE
D: DRAIN
S: SOURCE

MODEL JC-1404HMA
SCHEMATIC DIAGRAM 1

RUN NO.1

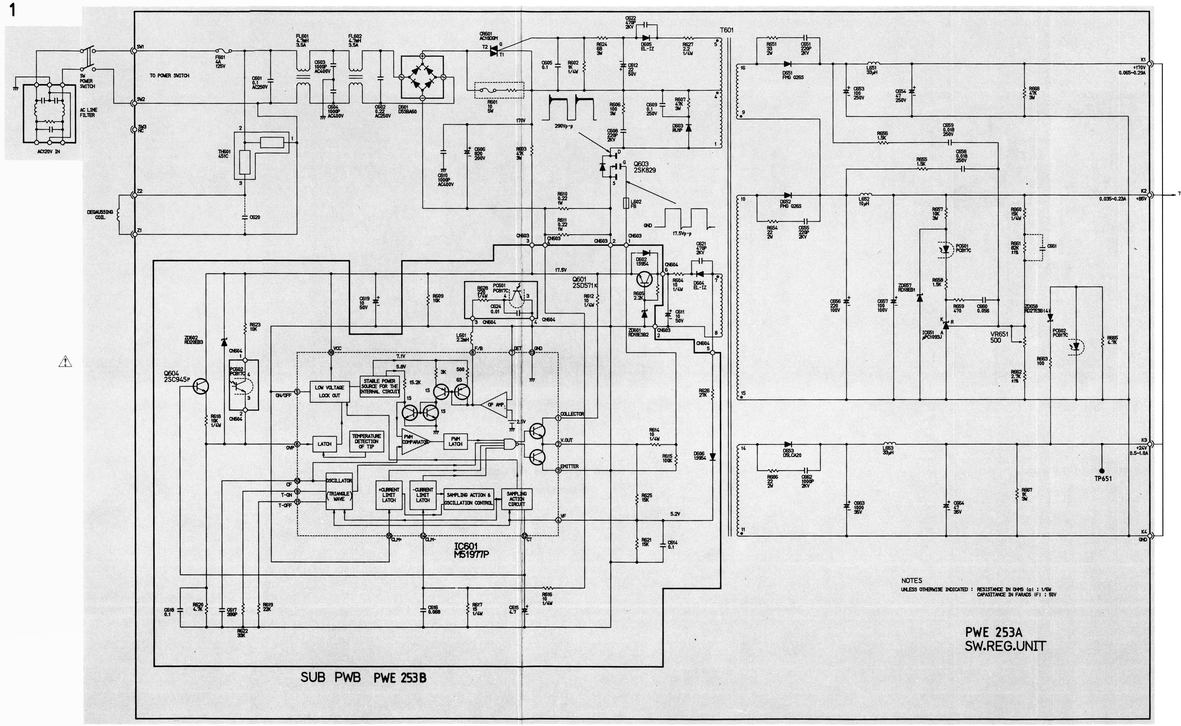

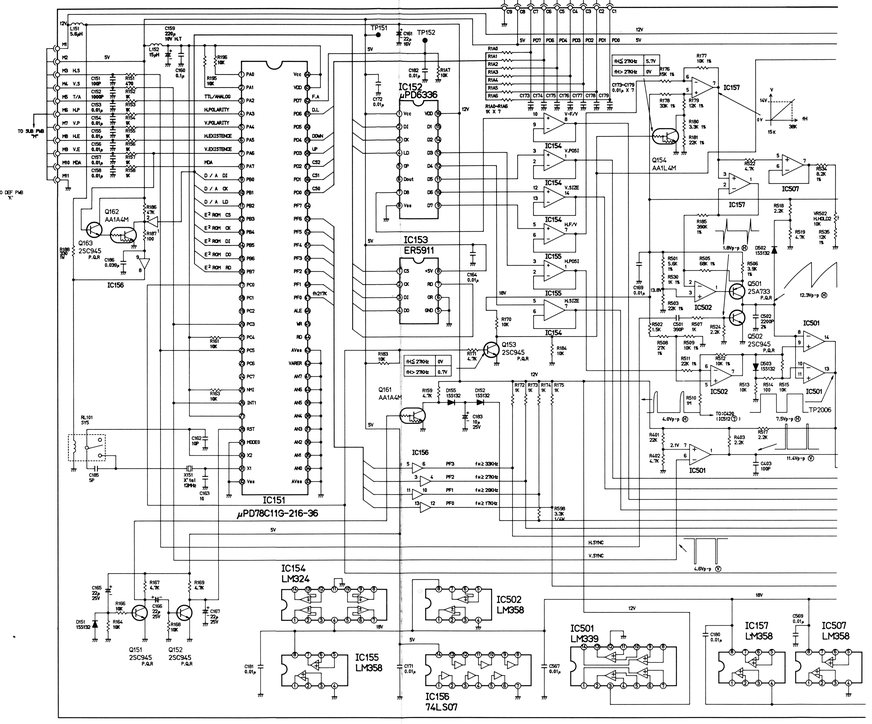

7816324□

MODEL JC-1404HMA
SCHEMATIC DIAGRAM 1

RUN NO.1

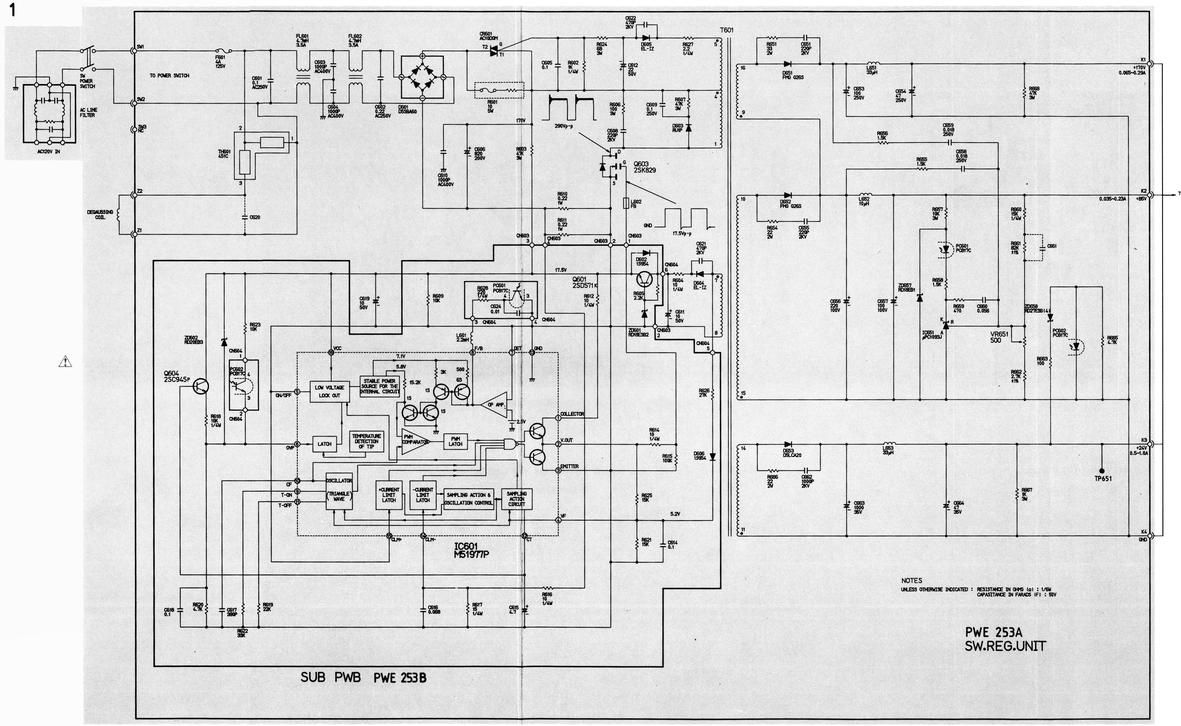

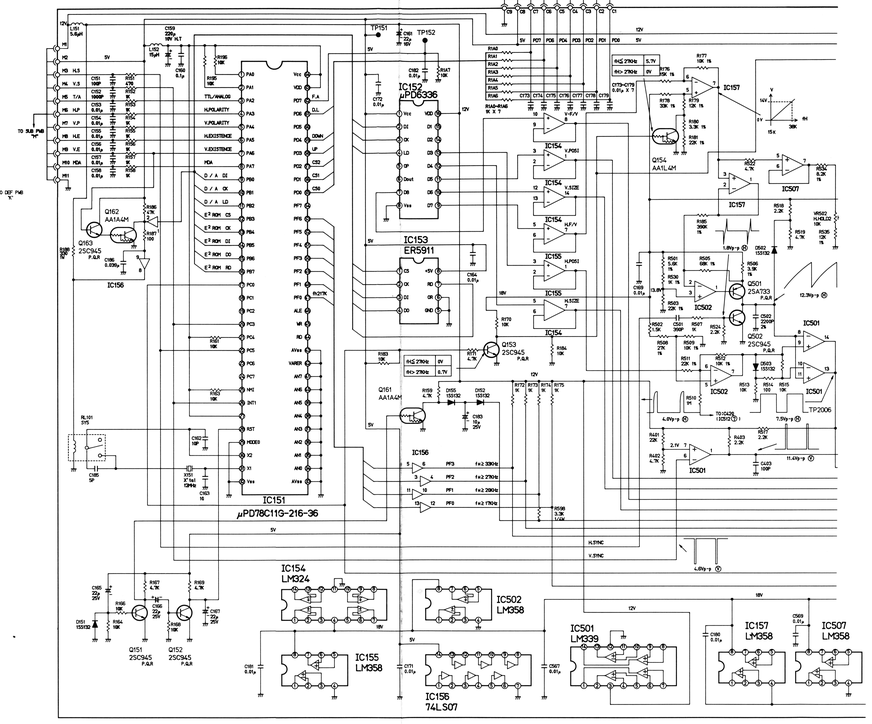

7816324□

RUN NO.2

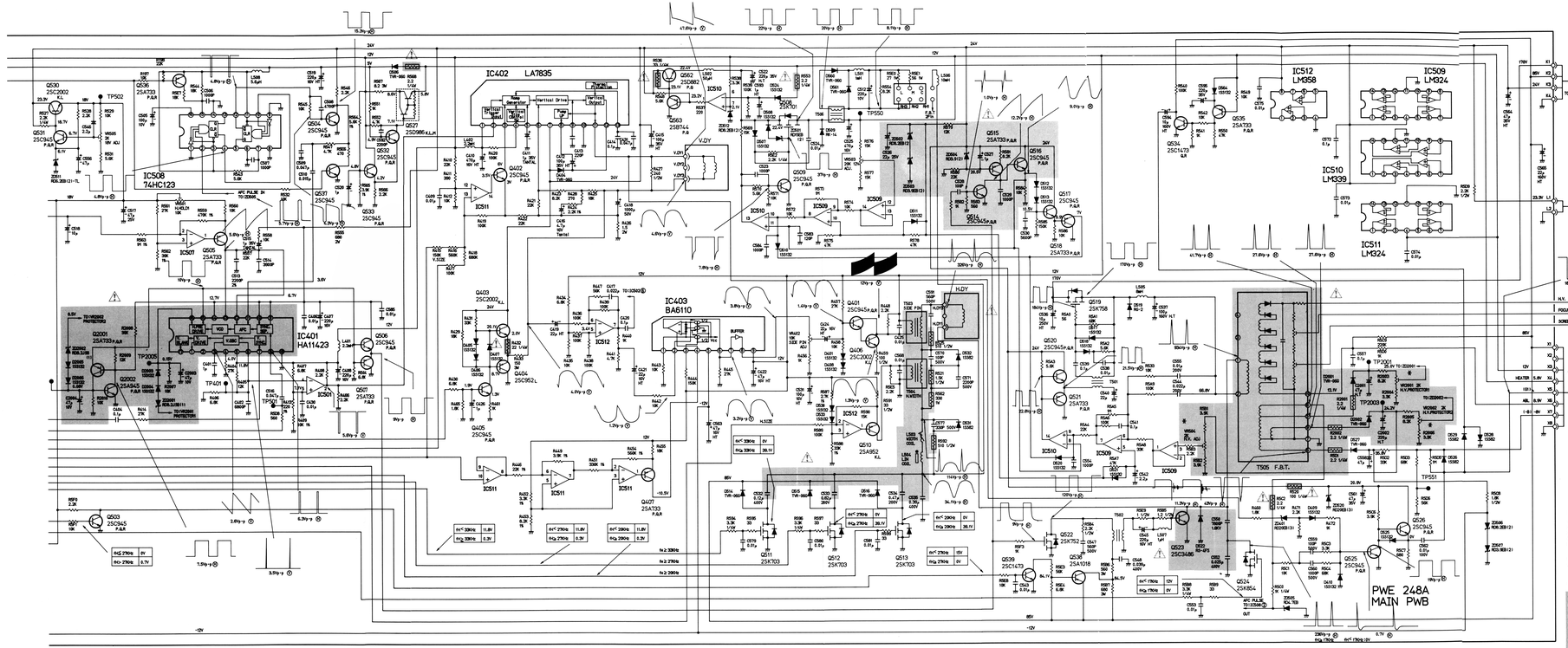

PD0 (CS0)	PD1 (CS1)	PD2 (CS2)	
L	L	L	——
L	L	H	BRIGHT
L	H	L	CONT
L	H	H	H.POSI
H	L	L	H.SIZE
H	L	H	V.POSI
H	H	L	V.SIZE
H	H	H	DISABLE

PD3	PD4	
H	L	UP
L	H	DOWN
H	H	DISABLE

PD6	PD7	
L	L	USER CONTROL MODE
L	H	FACTORY ADJ. MODE
H	L	DATA LOAD
H	H	FACTORY DATA WRITING

PA2 (SDA, PWLO)	PA3 (HP)	PA4 (VP)	PA5 (HE)	PA6 (VE)	PA7 MODE	FH	FV	
H	L	L	H	H	L	——	0	CGA
H	L	H	H	H	L	——	0	EGA
L	L	H	H	H	L	(1)	0	VGA 350
L	H	L	H	H	L	(1)	0	VGA 400
L	H	H	H	H	L	(1)	0	VGA 480
L	——	——	——	——	L	——	1	8514A
L	——	——	——	——	L	——	0	MAC II
L	L	L	H	H	L	(11)	0	800 * 600(11)P.P
H	——	——	——	——	H	——	0	MDA
L	——	——	H	L	L	(1)	0	PGC
H	——	——	H	L	L	——	0	TTL C.S.
H	H	L	H	H	L	——	0	TTL N.P.
H	H	H	H	H	L	——	0	TTL N.N.
L	L	L	H	H	L	(1)	0	ANALOG(1) PP
L	——	——	H	L	L	(11)	0	ANALOG(2) CS
L	——	——	——	——	H	——	0	USER
L	L	H	H	H	L	(11)	0	800 * 600(2)
L	H	L	H	H	L	(11)	0	800 * 600(3)
L	H	H	H	H	L	(11)	0	800 * 600(4)

NOTES

1. RESISTOR VALUES ARE IN Ω 10MH: K = 1,000Ω M = 1,000,000Ω
2. ALL RESISTORS ARE 1/8W±1% EXCEPT WHERE OTHERWISE INDICATED.
3. CAPACITOR VALUES ARE IN μF UNLESS OTHERWISE INDICATED. P = PF
4. ALL CAPACITORS ARE 50VOLTS EXCEPT WHERE OTHERWISE INDICATED.
5. VOLTAGES AND WAVEFORMS ARE MEASURED UNDER THE CHARACTER SIGNALS IN THE CONDITIONS OF CONTRAST AND BRIGHTNESS CONTROLS ARE MAXIMUM AND ALL OTHER CONTROLS ARE NORMAL OPERATION.
6. ⟵ HORIZONTAL RATE. ⟵ VERTICAL RATE.
7. VOLTAGES AND WAVEFORMS ARE MEASURED UNDER THE FOLLOWING SYNC. AND VIDEO. SYNC: HORIZONTAL RATE, 30KHz SEPARATE SYNC. TTL LEVEL POSITIVE
VIDEO: TTL LEVEL POSITIVE ALL SHORTED "H" PATTERN
8. L=TTL LOW LEVEL
H=TTL HIGH LEVEL

S 1 1 : Fh = 30KHz
1 (1) Fh = 30KHz
10, Fh 0-31=31.75KHz
1-Fh=0.75KHz

WARNING

REPLACEMENT PARTS WHICH HAVE SPECIAL SAFETY CHARACTERISTICS ARE IDENTIFIED BY ⚠ MARKING ON THE SCHEMATICS. REPLACE THESE CRITICAL COMPONENTS WITH RECOMMENDED REPLACEMENT PARTS.
DON'T DEGRADE THE SAFETY OF THE SET THROUGH IMPROPER SERVICING.
CONTROL (S) MARKED ⚠ IS PERMANENTLY PRESET.
DO NOT ATTEMPT TO REPAIR OR IMPROPERLY REPLACE.

RUN NO.2

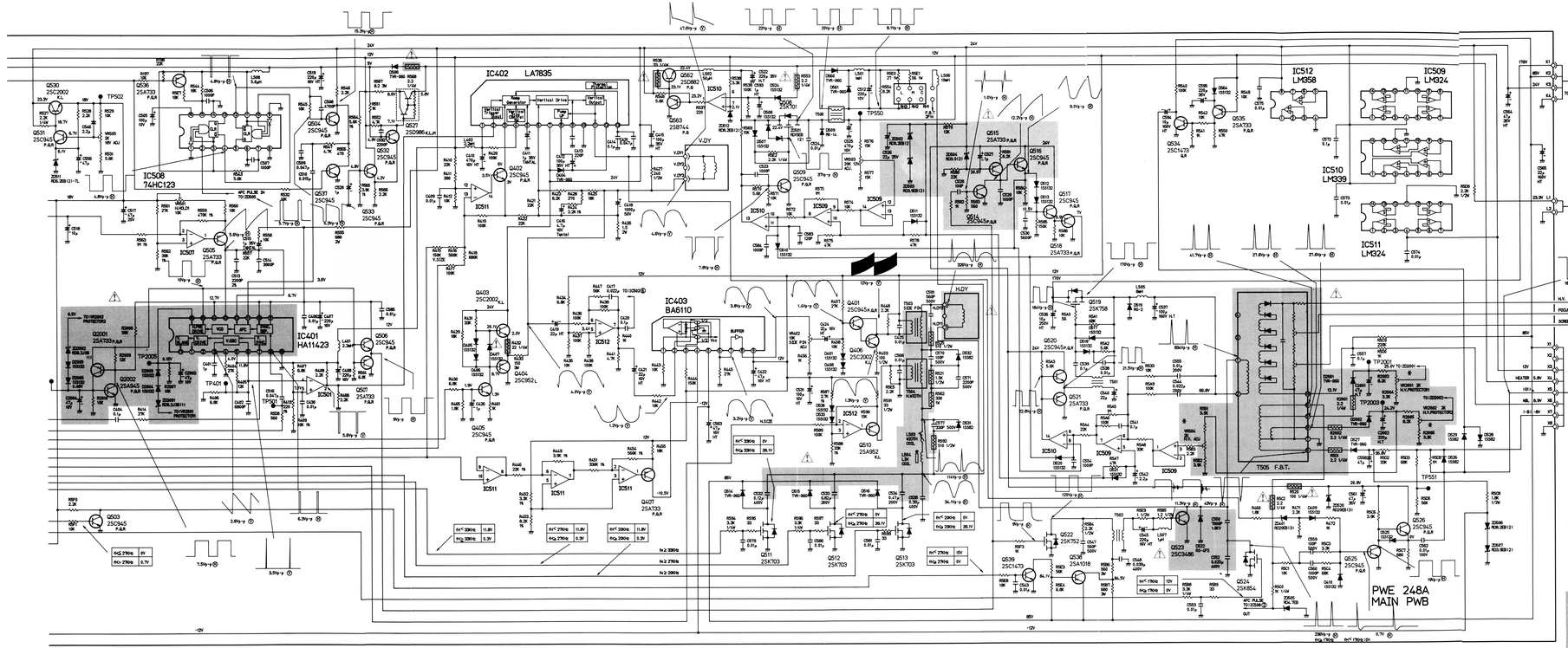

PD0 (CS0)	PD1 (CS1)	PD2 (CS2)	
L	L	L	——
L	L	H	BRIGHT
L	H	L	CONT
L	H	H	H.POSI
H	L	L	H.SIZE
H	L	H	V.POSI
H	H	L	V.SIZE
H	H	H	DISABLE

PD3	PD4	
H	L	UP
L	H	DOWN
H	H	DISABLE

PD6	PD7	
L	L	USER CONTROL MODE
L	H	FACTORY ADJ. MODE
H	L	DATA LOAD
H	H	FACTORY DATA WRITING

PA2 (SDA, PWLO)	PA3 (HP)	PA4 (VP)	PA5 (HE)	PA6 (VE)	PA7 MODE	FH	FV	
H	L	L	H	H	L	——	0	CGA
H	L	H	H	H	L	——	0	EGA
L	L	H	H	H	L	(1)	0	VGA 350
L	H	L	H	H	L	(1)	0	VGA 400
L	H	H	H	H	L	(1)	0	VGA 480
L	——	——	——	——	L	——	1	8514A
L	——	——	——	——	L	——	0	MAC II
L	L	L	H	H	L	(11)	0	800 * 600(11)P.P
H	——	——	——	——	H	——	0	MDA
L	——	——	H	L	L	(1)	0	PGC
H	——	——	H	L	L	——	0	TTL C.S.
H	H	L	H	H	L	——	0	TTL N.P.
H	H	H	H	H	L	——	0	TTL N.N.
L	L	L	H	H	L	(1)	0	ANALOG(1) PP
L	——	——	H	L	L	(11)	0	ANALOG(2) CS
L	——	——	——	——	H	——	0	USER
L	L	H	H	H	L	(11)	0	800 * 600(2)
L	H	L	H	H	L	(11)	0	800 * 600(3)
L	H	H	H	H	L	(11)	0	800 * 600(4)

NOTES

1. RESISTOR VALUES ARE IN Ω 10MH: K = 1,000Ω M = 1,000,000Ω
2. ALL RESISTORS ARE 1/8W±1% EXCEPT WHERE OTHERWISE INDICATED.
3. CAPACITOR VALUES ARE IN μF UNLESS OTHERWISE INDICATED. P = PF
4. ALL CAPACITORS ARE 50VOLTS EXCEPT WHERE OTHERWISE INDICATED.
5. VOLTAGES AND WAVEFORMS ARE MEASURED UNDER THE CHARACTER SIGNALS IN THE CONDITIONS OF CONTRAST AND BRIGHTNESS CONTROLS ARE MAXIMUM AND ALL OTHER CONTROLS ARE NORMAL OPERATION.
6. ⟵ HORIZONTAL RATE. ⟵ VERTICAL RATE.
7. VOLTAGES AND WAVEFORMS ARE MEASURED UNDER THE FOLLOWING SYNC. AND VIDEO. SYNC: HORIZONTAL RATE, 30KHz SEPARATE SYNC. TTL LEVEL POSITIVE
VIDEO: TTL LEVEL POSITIVE ALL SHORTED "H" PATTERN
8. L=TTL LOW LEVEL
H=TTL HIGH LEVEL

S 1 1 : Fh = 30KHz
1 (1) Fh = 30KHz
10, Fh 0-31=31.75KHz
1-Fh=0.75KHz

WARNING

REPLACEMENT PARTS WHICH HAVE SPECIAL SAFETY CHARACTERISTICS ARE IDENTIFIED BY ⚠ MARKING ON THE SCHEMATICS. REPLACE THESE CRITICAL COMPONENTS WITH RECOMMENDED REPLACEMENT PARTS.
DON'T DEGRADE THE SAFETY OF THE SET THROUGH IMPROPER SERVICING.
CONTROL (S) MARKED ⚠ IS PERMANENTLY PRESET.
DO NOT ATTEMPT TO REPAIR OR IMPROPERLY REPLACE.

NEC JC-1404HMA
SUB PWB
SCHEMATIC DIAGRAM 2

RUN NO.2

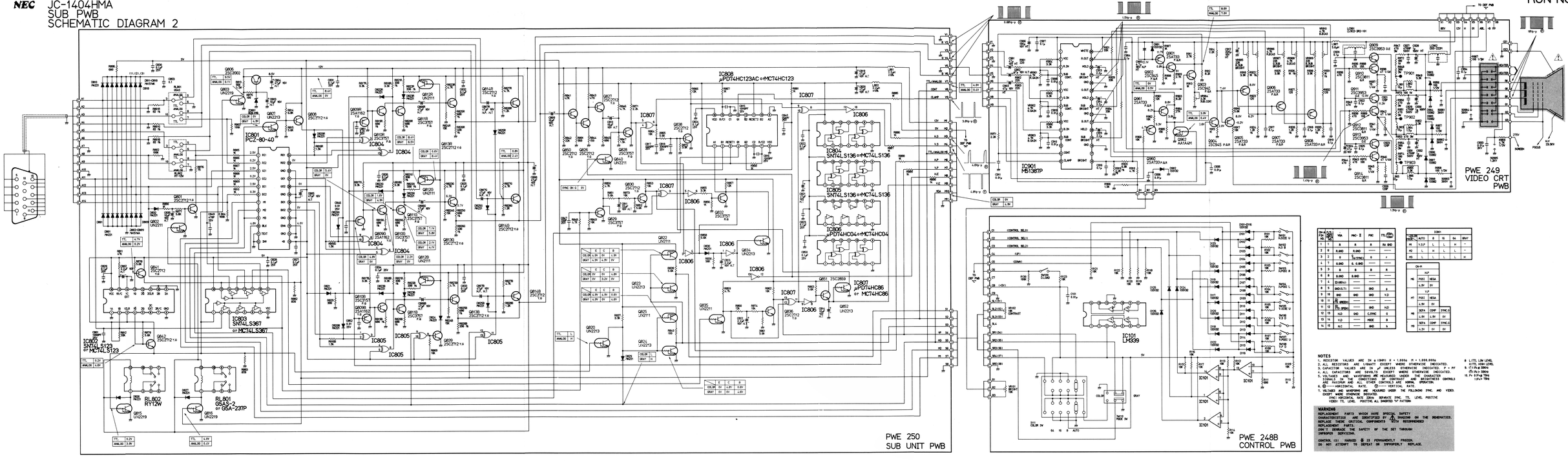

NOTES
1. RESISTOR VALUES ARE IN ± (OHM) K = 1,000 M = 1,000,000
2. ALL RESISTORS ARE 1/4WATT EXCEPT WHERE OTHERWISE INDICATED.
3. CAPACITOR VALUES IN μF UNLESS OTHERWISE INDICATED. P = PF
4. ALL CAPACITORS ARE 50 VOLTS UNLESS OTHERWISE INDICATED.
5. VOLTAGES AND WAVEFORMS ARE MEASURED UNDER NO SIGNAL CHARACTER CONDITIONS OF THE CONDITIONS OF CONTRAST AND BRIGHTNESS CONTROLS ARE MAXIMUM AND ALL OTHER CONTROLS ARE NORMAL OPERATION.
6. ⊖ ····· HORIZONTAL RATE. ⊖ ····· VERTICAL RATE.
7. VOLTAGES AND WAVEFORMS ARE MEASURED UNDER THE FOLLOWING SYNC. AND VIDEO. CONDITIONS OF THE TEST PATTERN
SYNC:HORIZONTAL RATE 15KHz, SEPARATE SYNC, TTL LEVEL, POSITIVE
VIDEO: TTL LEVEL, POSITIVE, ALL DARKENED "F" PATTERN

WARNING
REPLACEMENT PARTS WHICH HAVE SPECIAL SAFETY CHARACTERISTICS ARE IDENTIFIED BY ⚠ MARK ON THE SCHEMATICS. AND PARTS LIST. USE OF CRITICAL COMPONENTS WITH RECOMMENDED REPLACEMENT PARTS.
DON'T DEGRADE THE SAFETY OF THE SET THROUGH IMPROPER SERVICING.
CONTROL (S1) MARKED ※ IS PERMANENTLY FROZEN.
DO NOT ATTEMPT TO DEFEAT OR IMPROPERLY REPLACE.

7816324□

NEC JC-1404HMA
SUB PWB
SCHEMATIC DIAGRAM 2

RUN NO.2

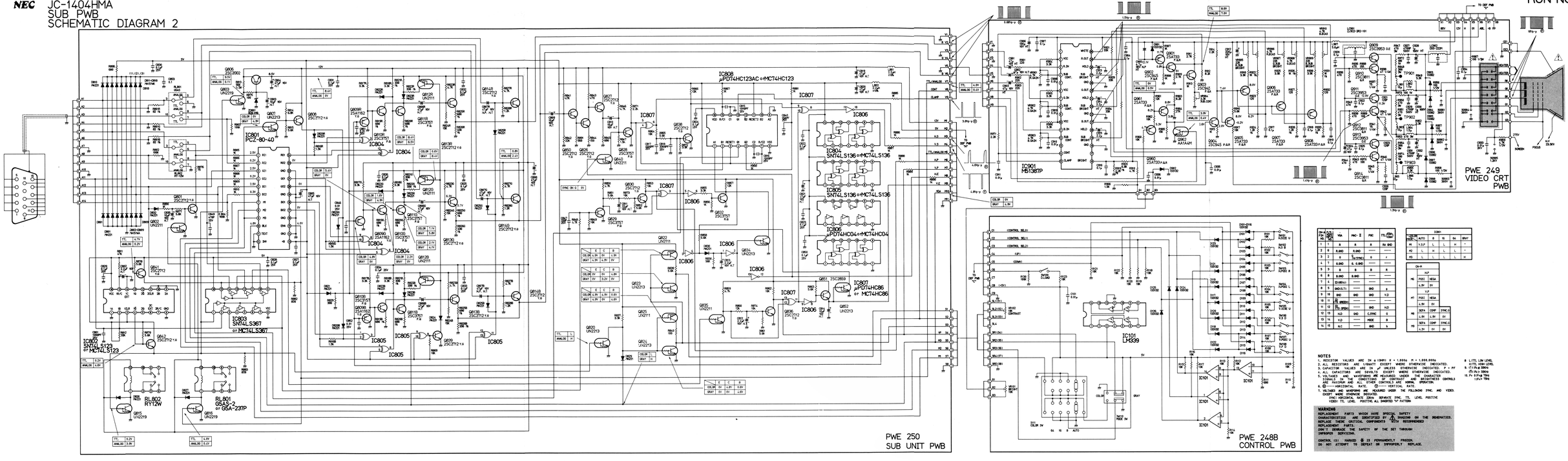

NOTES
1. RESISTOR VALUES ARE IN ± (OHM) K = 1,000 M = 1,000,000
2. ALL RESISTORS ARE 1/4WATT EXCEPT WHERE OTHERWISE INDICATED.
3. CAPACITOR VALUES IN μF UNLESS OTHERWISE INDICATED. P = PF
4. ALL CAPACITORS ARE 50 VOLTS UNLESS OTHERWISE INDICATED.
5. VOLTAGES AND WAVEFORMS ARE MEASURED UNDER NO SIGNAL CHARACTER CONDITIONS OF THE CONDITIONS OF CONTRAST AND BRIGHTNESS CONTROLS ARE MAXIMUM AND ALL OTHER CONTROLS ARE NORMAL OPERATION.
6. ⊖ ····· HORIZONTAL RATE. ⊖ ····· VERTICAL RATE.
7. VOLTAGES AND WAVEFORMS ARE MEASURED UNDER THE FOLLOWING SYNC. AND VIDEO. CONDITIONS OF THE TEST PATTERN
SYNC:HORIZONTAL RATE 15KHz, SEPARATE SYNC, TTL LEVEL, POSITIVE
VIDEO: TTL LEVEL, POSITIVE, ALL DARKENED "F" PATTERN

WARNING
REPLACEMENT PARTS WHICH HAVE SPECIAL SAFETY CHARACTERISTICS ARE IDENTIFIED BY ⚠ MARK ON THE SCHEMATICS. AND PARTS LIST. USE OF CRITICAL COMPONENTS WITH RECOMMENDED REPLACEMENT PARTS.
DON'T DEGRADE THE SAFETY OF THE SET THROUGH IMPROPER SERVICING.
CONTROL (S1) MARKED ※ IS PERMANENTLY FROZEN.
DO NOT ATTEMPT TO DEFEAT OR IMPROPERLY REPLACE.

7816324□

MODEL JC-1404HMA
SCHEMATI DIAGRAM 1

RUN NO.2

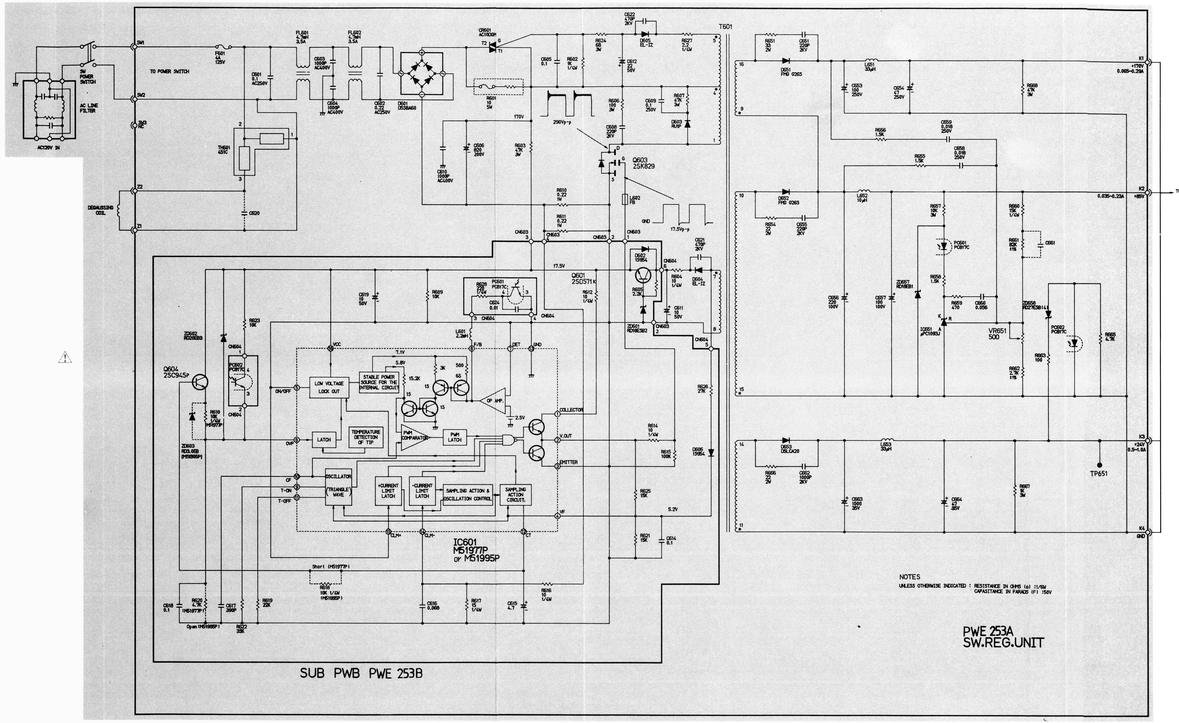

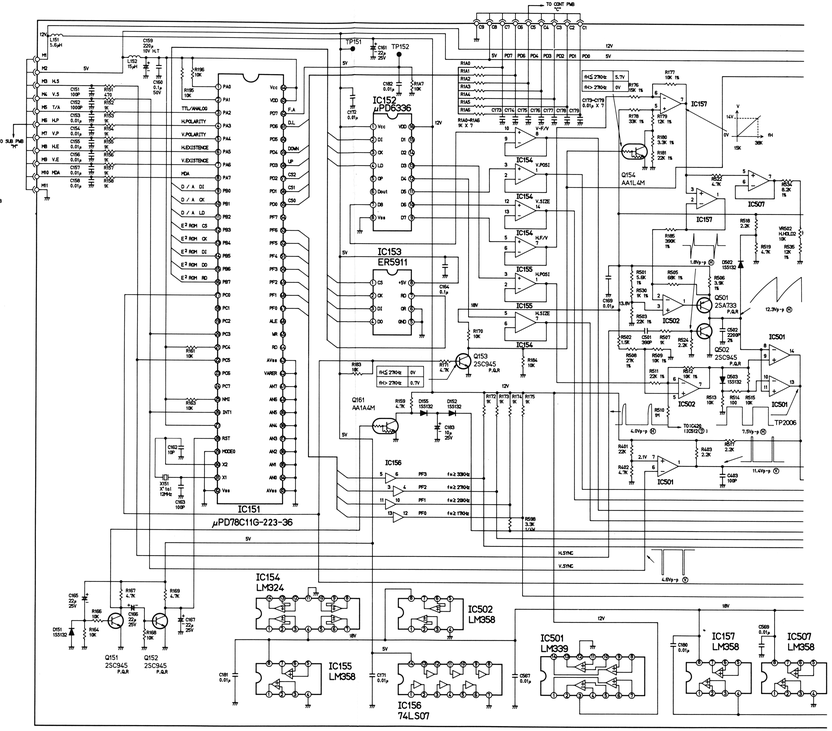

7816324□

MODEL JC-1404HMA
SCHEMATI DIAGRAM 1

RUN NO.2

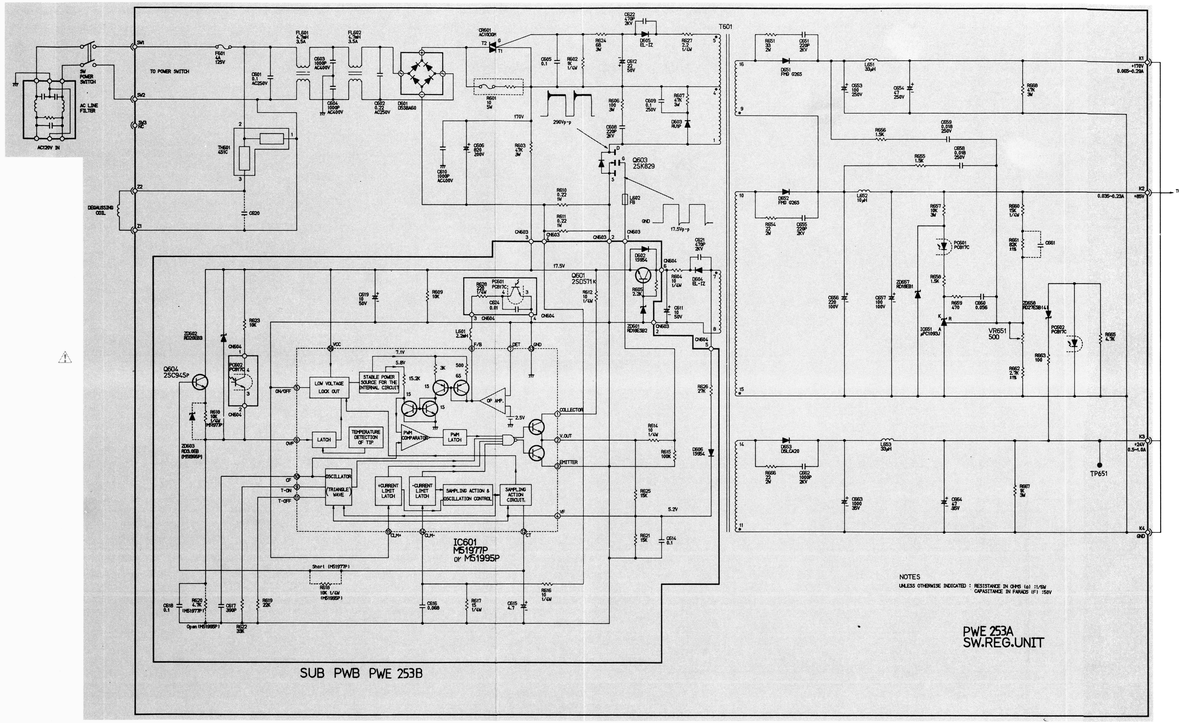

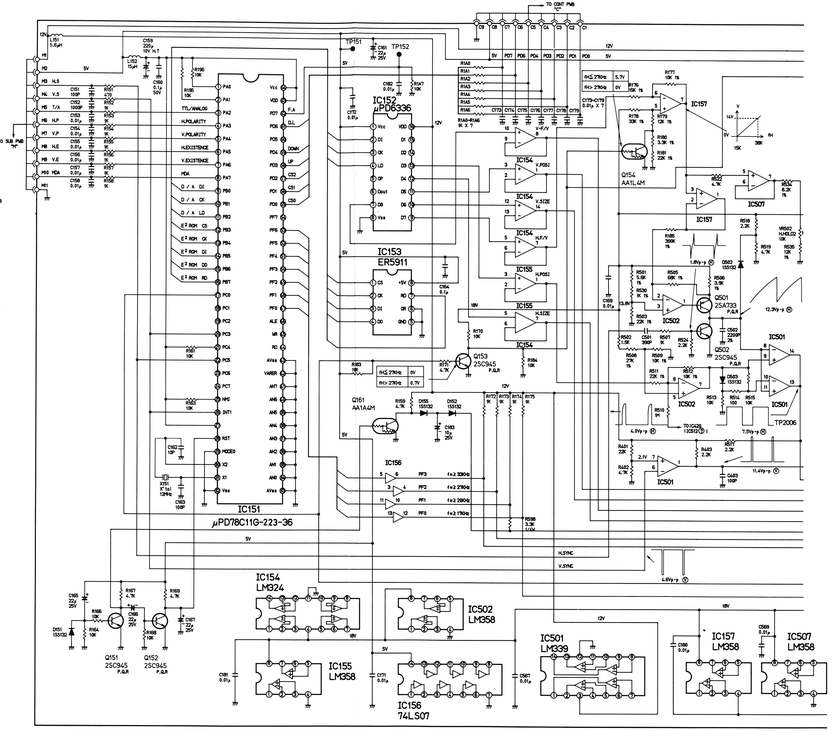

7816324□

BLOCKDIAGRAM

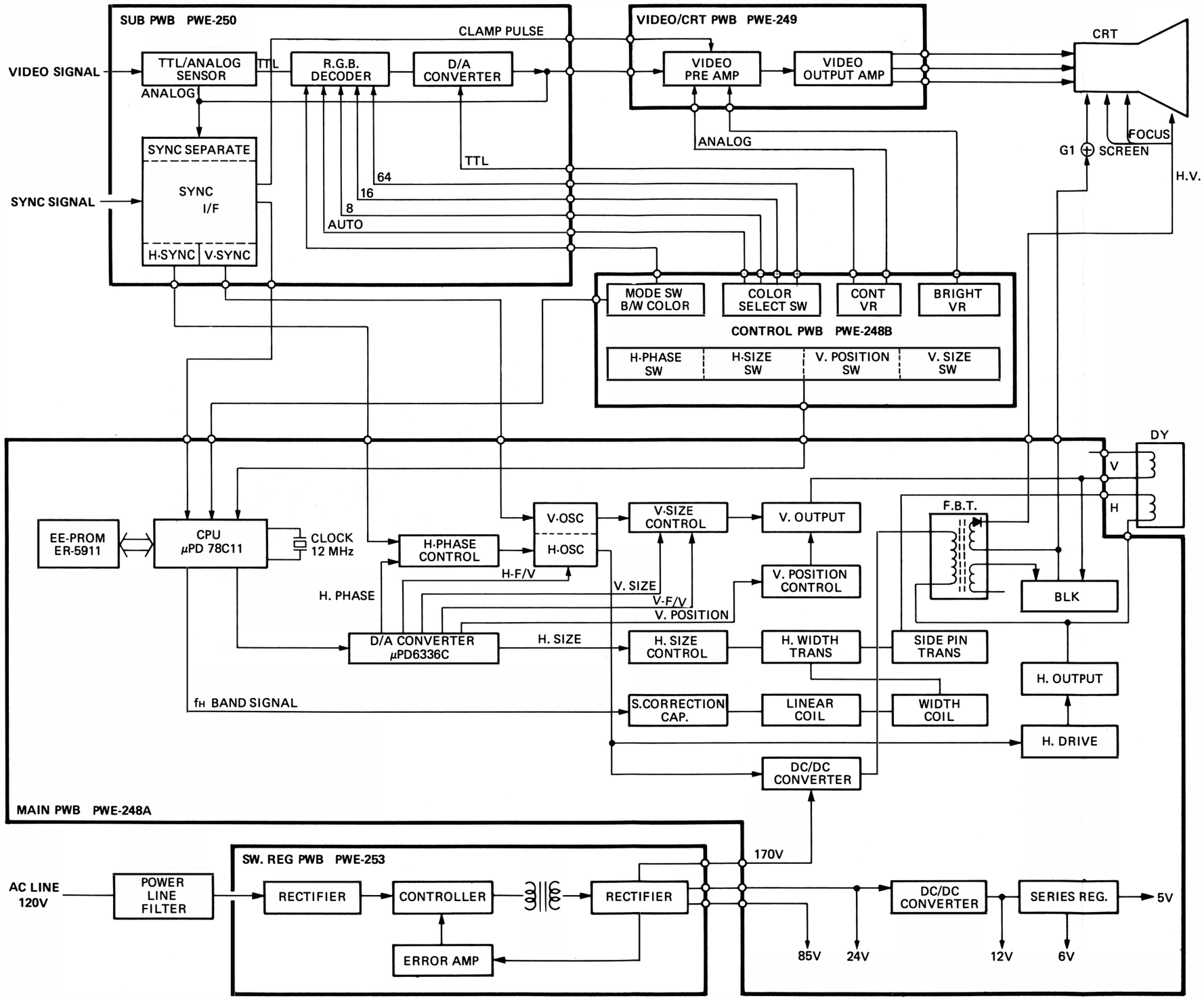

BLOCKDIAGRAM

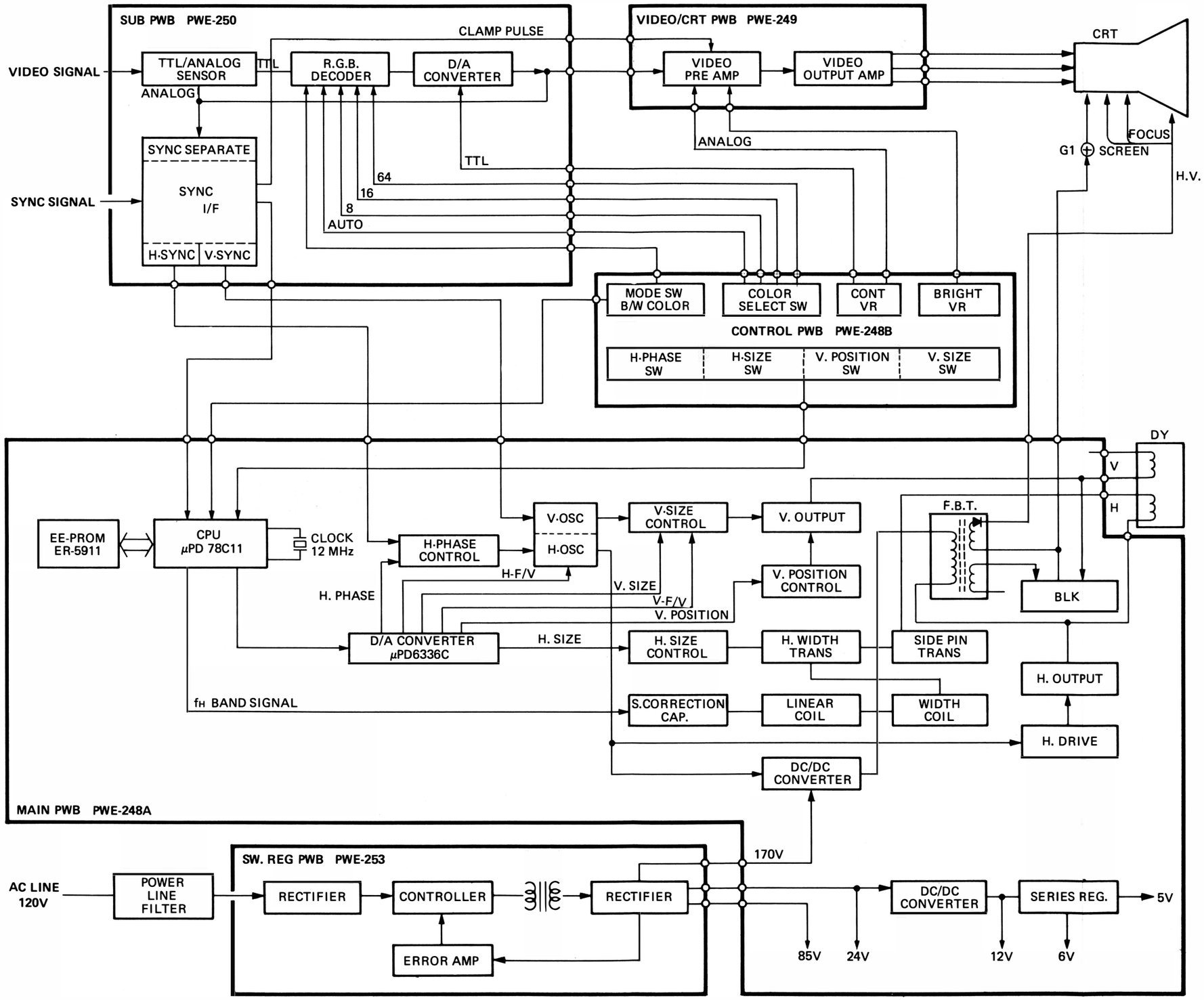

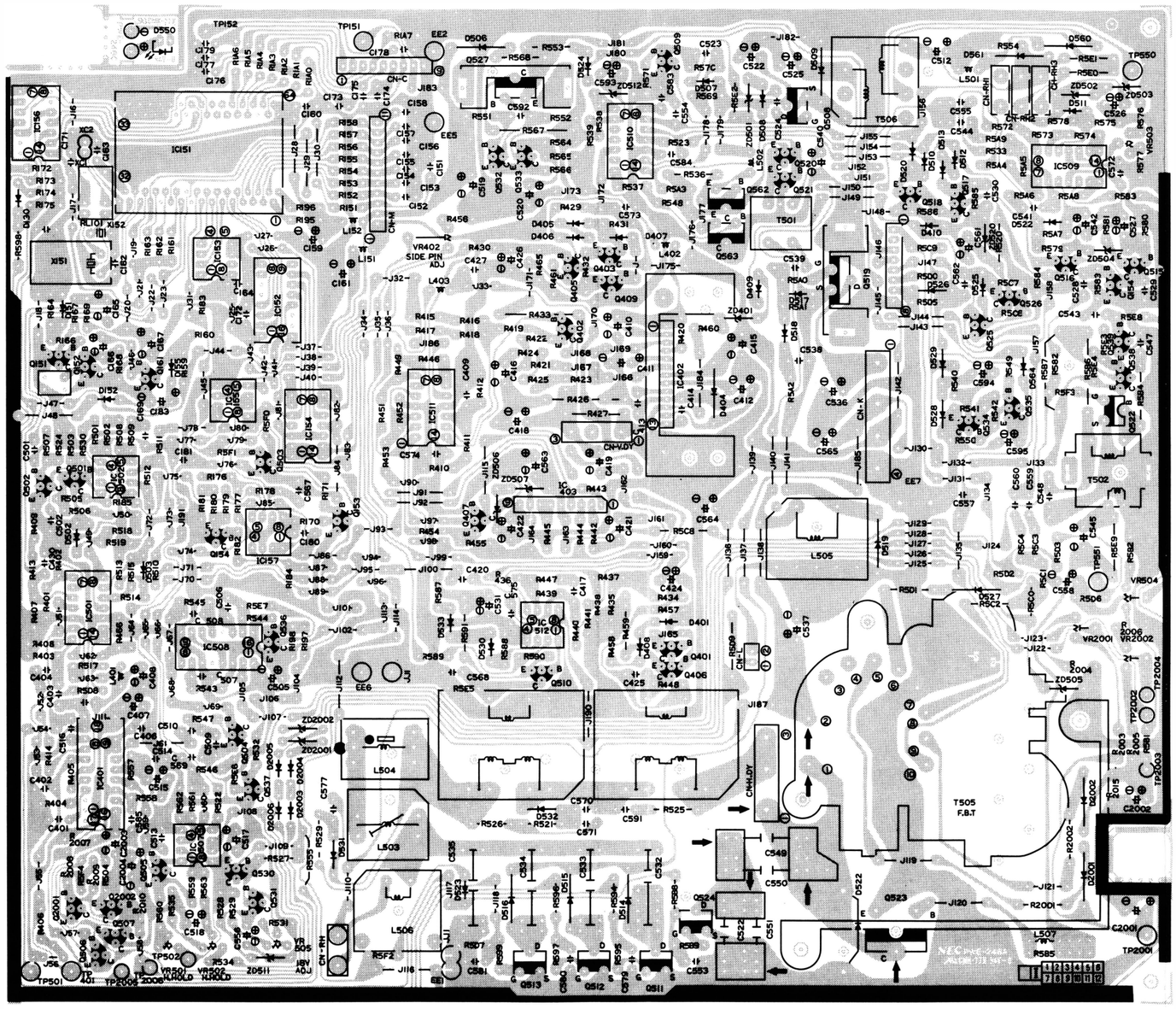

MAIN PWB ASSY (PWE-248A)

—Solder side—

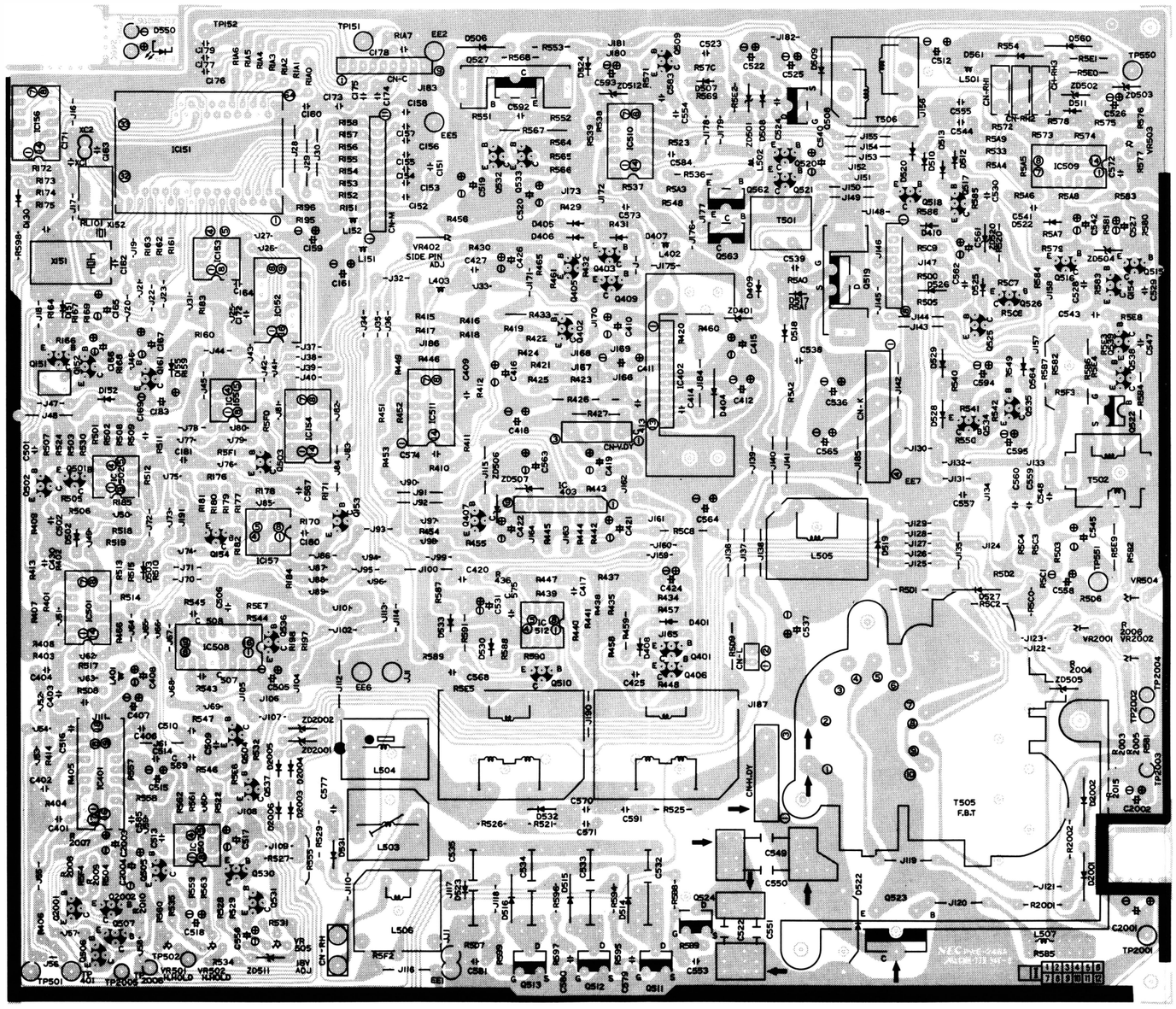

MAIN PWB ASSY (PWE-248A)

—Solder side—

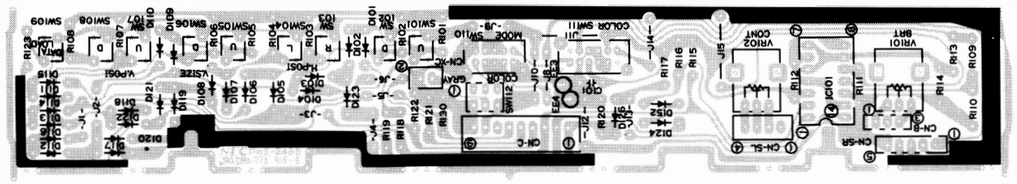

CONTROL PWB ASSY (PWE-248B)
—Solder side—

LED PWB ASSY (PWE-248C)
—Solder side—

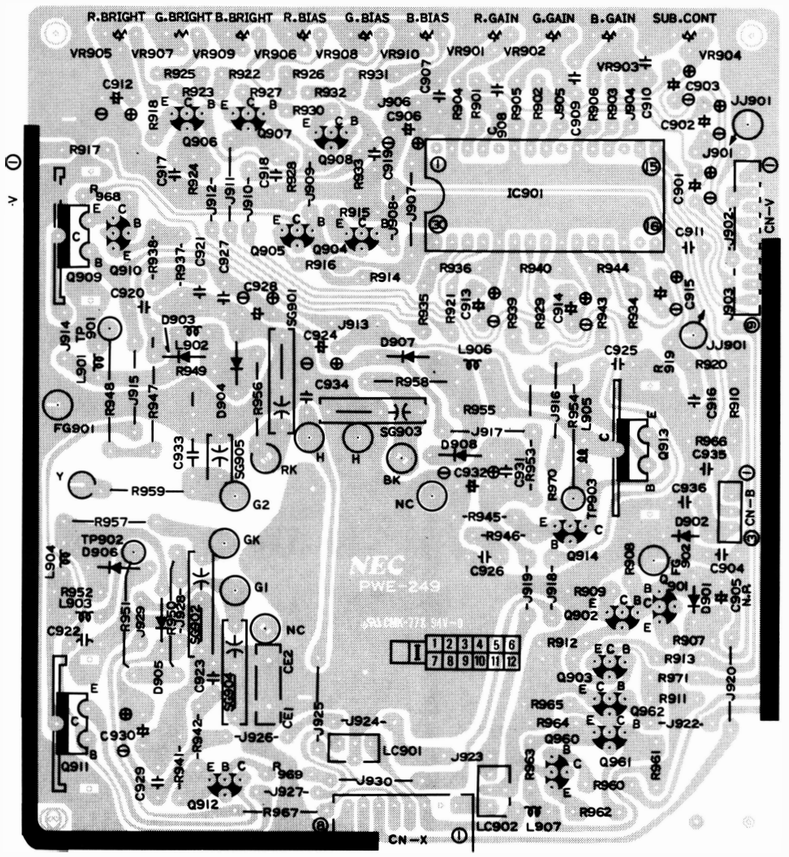

VIDEO/CRT PWB ASSY (PWE-249)
—Solder side—

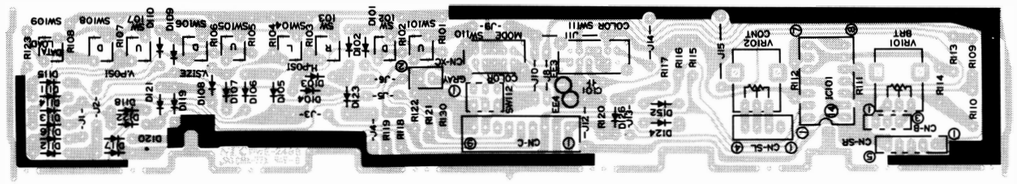

CONTROL PWB ASSY (PWE-248B)
—Solder side—

LED PWB ASSY (PWE-248C)
—Solder side—

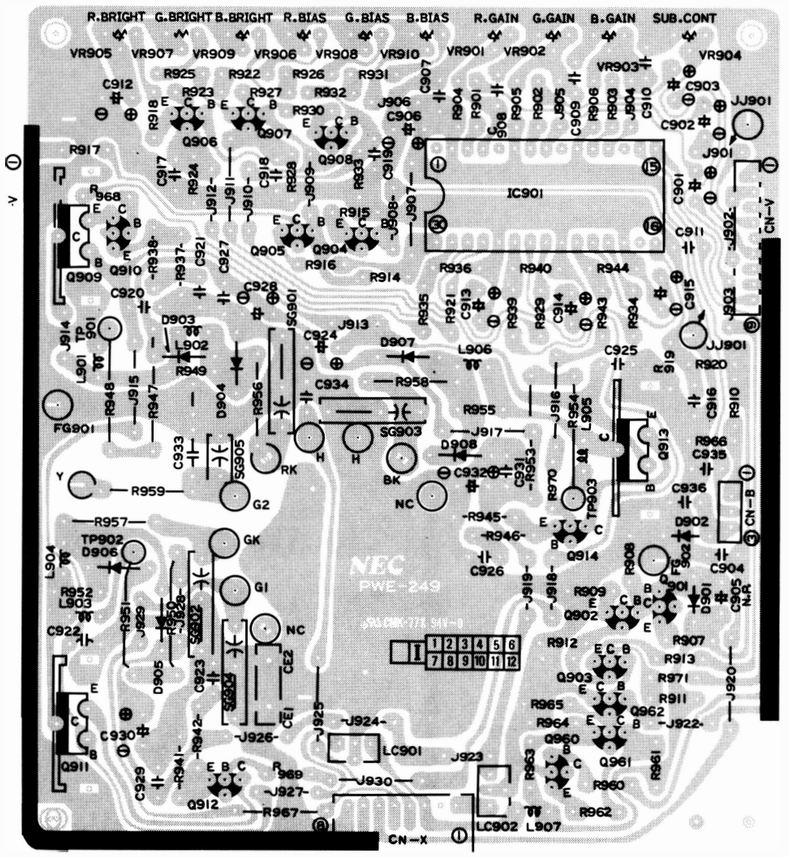

VIDEO/CRT PWB ASSY (PWE-249)
—Solder side—

Este manual original foi gentilmente cedido para ser digitalizado por PY2TKI Marcos
Digitalizado em 02 de Dezembro de 2020 por Alexandre "Tabajara" Souza, PU2SEX
http://www.tabalabs.com.br
http://tabajara-labs.blogspot.com
MANUAL DE DISTRIBUIÇÃO GRATUITA - Respeite o meu esforço de preservar a documentacao